MATERIAL HANDLING SOLUTIONS
Via Buffalora, 3 – 25135 Brescia
info@mhs.srl · www.mhs.srl

HANGCHA

Factory site: 666 Xiangfu Road,

Follow us on Facebook

Follow us on YouTube

Follow us on WeChat

Download "Hangcha Forklift" App

ISO45001
ISO45001:2018

ISO14001
ISO14001:2015

ISO9001
ISO9001:2015

HANGCHA trucks conform to the European Safety Requirements.

2024 VERSION 2 / COPYRIGHT 2024/10

colors, equipment, or specifications detailed in this brochure, or to discontinue individual models. The colors of trucks, delivered may differ slightly from those in brochures.

WS Series Electric Pedestrian Stacker

with capacity of 1,200kg and 1,500kg

LI-ION TECHNOLOGY

CTD15-WS

CDD12-WS-I & CDD15-WS-I

CDD12-WS & CDD15-WS

The World of Hangcha

HANGCHA

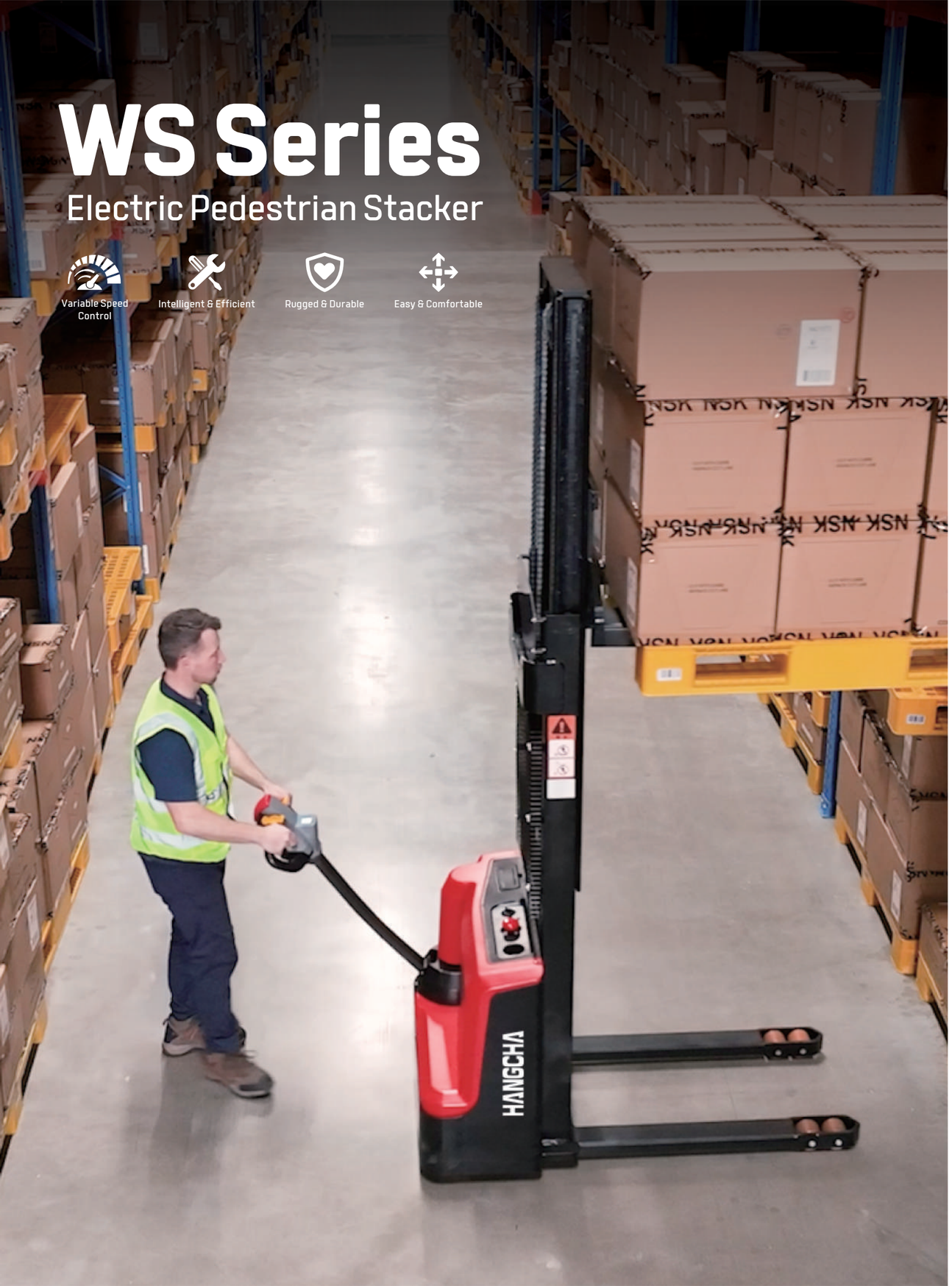

Variable Speed Control on Lifting & Lowering

- Comfortable and efficient thanks to Hangcha patented intelligent handle and control system, ideal for replacing manual & semi-electric stackers, for light use in narrow warehouse environments with efficient and easy pallet stacking.
- The proportional lowering brings high efficiency for exact pallet placement and more precise control when compared to the normal fixed speed of lifting & lowering.
- Variable speed control by proportional control knob, keeps lifting and lowering smooth, stable, safe and engergy saving.

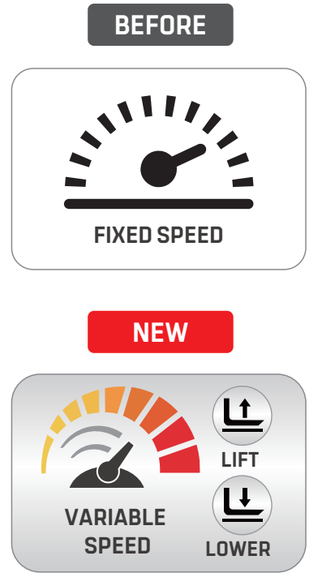

Precise Control

Proportional lifting & lowering

The variable speed control ensures the stacker goes up and down smoothly, minimizing the mechanical shock and vibration, ensuring fragile loads are gently placed on racking or the floor, and reducing the impact of noise and vibration on operators.



(FOR CDD12-WS & CDD12-WS-I)

High efficiency

The variable speed control brings accurate response for adjusting the lifting & lowering speed according to the actual situation, the operator can easily complete the task and improve the working efficiency.

Lowering buffering

Automatic lowering speed descent with soft buffering when the fork height is lowered to around 10cm from the ground, effectively protects the safety of the cargo, low noise and small vibration.

Longer service life

Variable speed control can reduce the mechanical impact and friction during lifting & lowering, reduce the wear and tear on the chassis, mast, bearings, and enable a longer service life.

Energy saving

Compared to the traditional fixed lifting & lowering speed, variable speed can be adjusted according to the load and height by operator, reducing energy waste and improving energy utilization rate.

Intelligent & Efficient

Hangcha patented multifunctional intelligent tiller handle is unique design for quick fault diagnosis, enabling an easier service, shorter service time and lowered labor costs.

Multifunctional intelligent tiller handle



1. Emergency reverse switch
2. Forward and backward control knob
3. Horn
4. Battery power
5. Recharging Alert
6. Lifting & Lowering
7. Fault code display

Easy Maintenance

RS 232

Serial communication technology

Single wiring harness communication from tiller handle to controller system.Simple, Durable and Stable.

- Low after-sales service cost
- Quick & easy fault diagnosis
- Everyone can be an expert

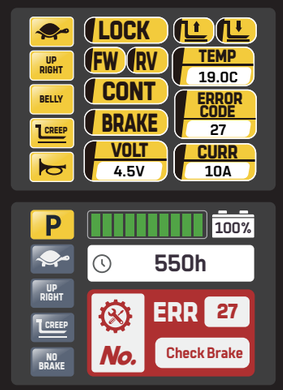

Operation status & fault diagnosis are integrated onto the tiller handle display for easy troubleshooting.

Operator Preferred

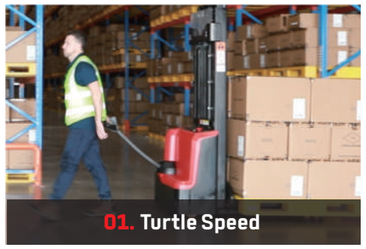

01. Turtle Speed

Enable operator to choose different speed modes based on their experience and the specific work environment.



02. Up-Right Drive

Easily maneuvered with the handle in the vertical position by pressing the turtle-speed button.

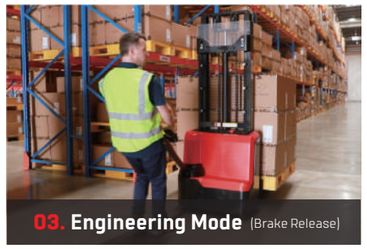

03. Engineering Mode (Brake Release)

When truck is down, release the brake to move the unit manually.

Rugged & Durable

Due to a high-strength frame and mast design and solid materials used, the deformation of the frame, mast, and forks is small.

1



Longer service life

Mast: Standard C+H channel steel
Frame: Steel plate thickness of 5mm
Frame bottom plate: 30mm integrated steel plate

2

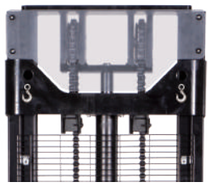

Double-chain design

Compared with single-chain design, it has higher strength, safer and more stable.

3



Built-in charger

Hidden charging plug, high safety, the whole vehicle is powered off during charging, reducing safety hazards.

Safe operation

4 Emergency reverse switch

In case of an emergency, it protects the operator and the surrounding personnel from harm.

Safety travel speed limit

When the fork is lifted to above 500mm, the driving speed automatically reduces to 2km/h to ensure the safety of operating at a high position in case of any misoperation.



FULL COVERAGE PROTECTION ON MAST

The low ground clearance of 30mm helps to reduce the risk of foot injuries

Small deformation of forks and masts, stable and durable

More stable when lifting & lowering with loads.

Standard equipped with cylinder explosion-proof valve

It can prevent accidents such as uncontrolled descent caused by unexpected rupture of oil pipes, ensuring stable descent of the load and personal safety, and preventing damage to equipment.



High-strength forks

The forks are formed in one piece with a thickness of 8mm steel. High strength and small deformation even under heavy loads.

5 The battery is fixed at the bottom of the frame

Improved stability.

Battery low voltage protection

Effectively avoid battery over-discharge, ensuring a longer battery life.

6 Adjustable balance wheel

Improved stability and maneuverability, suitable for different working scenarios.

High lateral and longitudinal stability

Wider wheelbase and longer axle distance.

Easy & Comfortable



Effortless, easy to operate

Low-mounted longer tiller reduces steering force required.

Low mast static height

Easy to operate in containers and elevators with less than 3.3m lifting height.



Easy to recharge

Built-in charger and an external charging cable storage box for convenient charging.

Longer operating time

Standard 24V/71Ah maintenance-free lead-acid battery, with the option of a larger capacity maintenance-free battery or a lithium battery.



The steering angle is designed to be above 180 degrees

Small turning radius.

Excellent maneuverability

Precise and maneuverable operating, high safety and efficiency.

Reasonable design of the balancing wheel eccentric distance.

Flexible direction commutation.



Optional Configuration

- ***Reversing buzzer***
- ***Intelligent control***
- ***24V/100Ah Li-ion***
- ***24V/30A chargers(Li-ion)***
  Lithium Battery Charger
  Charging time: 2-4 hours
- ***24V/105Ah Lead-acid***
- ***Free Lift***
  Only CDD12-WS and CDD12-WS-I are available; Suitable for heights of 2.5M and above only

Unique in the market and very suitable for sorting operations on trucks.
With a dedicated remote control device, the operator can control the forks to lift to the appropriate working height and carry out sorting operations, thus avoiding the need to use the handle buttons and bend over to pick up goods, improving operational efficiency and comfort.

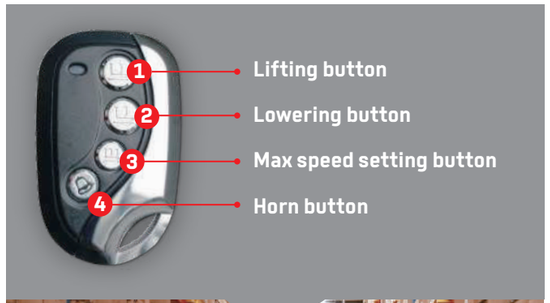



With the remote control device, you can easily set the speed suitable for the work, from level 1 speed to level 5 speed. Such speed transitions allow you to move the truck with controlled operation at ease.





WS Electric Pedestrian Stacker Specification

Distinguishing mark	1.1	Manufacturer						
	1.2	Manufacturer's type designation			CDD15-WS	CDD15-WS-I	CDD12-WS	CDD12-WS-I
	1.3	Drive			Battery		Battery	
	1.4	Operator type			Pedestrian		Pedestrian	
	1.5	Load capacity/rated load	Q	kg	1500		1200	
	1.6	Load centre distance	c	mm	600		600	
	1.8	Load distance, centre of drive axle to fork	x	mm	800		800	
	1.9	Wheelbase	y	mm	1210		1210	
Weight	2.1	Service weight (without battery) (560 Fork size)		kg	529.4	529.4	528	528
	2.2	Service weight (with 71Ah battery or 60Ah Li-battery)		kg	576.2	543.4	574.8	542
	2.3	Service weight (with 89Ah battery)		kg	581	/	579.6	/
	2.4	Axle loading, laden front/rear		kg	608.8/1420.6	613/1430.4	518.4/1209.6	522.6/1219.4
	2.5	Axle loading, unladen front/rear		kg	432.2/144	407.4/136	431/143.8	406.5/135.5
Tyres, chassis	3.1	Wheels			Polyurethane		Polyurethane	
	3.2	Wheel size, front	Ø x width	mm	Ø210x70		Ø210x70	
	3.3	Wheel size, rear	Ø x width	mm	Ø80X70		Ø80X70	
	3.4	Additional wheels (dimensions)	Ø x width	mm	Ø115X55		Ø115X55	
	3.5	Wheels, number front/rear (x = driven wheels)			1x + 1 / 4		1x + 1 / 4	
	3.6	Tread, front	b_{10}	mm	550		550	
	3.7	Tread, rear	b_{11}	mm	390(560 fork width)/525(680 fork width)		390(560 fork width)/525(680 fork width)	
Dimensions	4.2	Lowered mast height	h_1	mm	1730		1730	
	4.4	Lift height	h_3	mm	2500		2500	
	4.5	Extended mast height	h_4	mm	2935		2935	
	4.9	Height of tiller in driving position, min./max.	h_{14}	mm	910/1270		910/1270	
	4.15	Height, lowered	h_{13}	mm	85±2		85±2	
	4.19	Overall length	l_1	mm	1730(1150 fork length)/1800(1220 fork length)		1730(1150 fork length)/1800(1220 fork length)	
	4.20	Length to face of forks	l_2	mm	560		560	
	4.21	Overall width	b_1	mm	820		820	
	4.22	Fork dimensions	s/e/l	mm	70x160x1150(1220)		70x160x1150(1220)	
	4.25	Width over forks	b_5	mm	560/680		560/680	
	4.32	Ground clearance, centre of wheelbase	m_2	mm	30		30	
	4.34.1	Aisle width for pallets 1000 × 1200 crossways	A_{st}	mm	2268		2268	
	4.34.2	Aisle width for pallets 800 × 1200 lengthways	A_{st}	mm	2194		2194	
	4.35	Turning radius	W_a	mm	1425		1425	
Performance data	5.1	Travel speed, with/without load		km/h	4/4.5		4/4.5	
	5.2	Lift speed, with/without load		mm/s	0-102/0-190		0-123/0-230	
	5.3	Lowering speed, with/without load		mm/s	30-135/20-200		28-164/26-278	
	5.8	Max. gradeability, with/without load		%	5/10		5/10	
	5.10	Service brake			Electromagnetic		Electromagnetic	
Electric-engine	6.1	Drive motor rating S2 60 min		kW	0.75		0.75	
	6.2	Lift motor rating at S3 15%		kW	2.5		2.5	
	6.4	Battery voltage/nominal capacity (K5)		V/Ah	● 12/71x2 ○(12/89)x2	24V/60Ah Li-battery	● 12/71x2 ○(12/89)x2	24V/60Ah Li-battery
	6.5	Battery weight +/- 5%		kg	● 23.4x2(71Ah) ○ 25.8x2(89Ah)	14	●23.4x2(71Ah) ○ 25.8x2(89Ah)	14
	6.6	Charger		A	10	15	10	15
Addition Data	8.1	Type of drive control			DC speed control		DC speed control	
	8.4	Sound level at the driver's ear according to EN 12053		dB(A)	<75		<75	

Note: 1kgs=2.2lbs, 25.4mm=1inch
● standard ○ option

Mast Dimensions

Mast types	Lift height h3(mm)	Lowered mast height h1(mm)	Free lift height h2(mm)	Extended mast height h4(mm)
Duplex Mast	2000	1480	/	2435
	2500	1730	/	2935
	3000	1980	/	3435
	3300	2130	/	3735
	3500	2230	/	3935
	4000	2550	/	4370
2-Free Mast	2500	1710	1300	2917
	3000	1960	1550	3417
	3300	2110	1700	3717
	3500	2210	2130	3917

2-Free Mast: Only CDD12-WS and CDD12-WS-I are available; Suitable for heights of 2.5M and above only

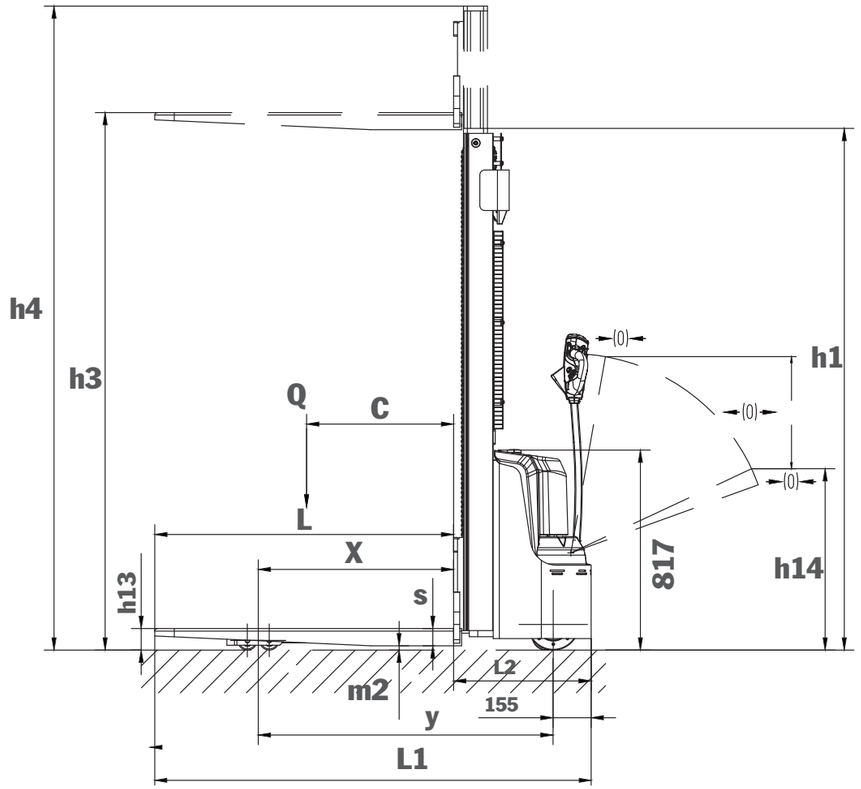

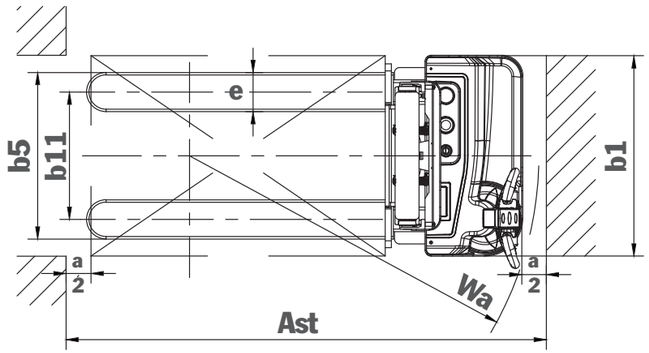

LOAD CHART

CDD15-WS/CDD15-WS-I (2.0m-3.5m)

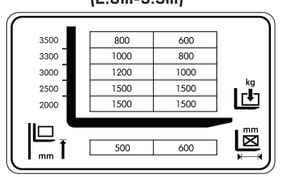

CDD15-WS/CDD15-WS-I (4m)

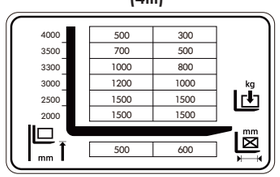

CDD12-WS/CDD12-WS-I

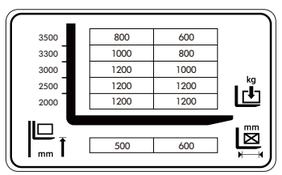

WS Electric Pedestrian Stacker Specification

Distinguishing mark	1.1	Manufacturer							
	1.2	Manufacturer's type designation			CTD15-WS				
	1.3	Drive			Battery				
	1.4	Operator type			Pedestrian				
	1.5	Load capacity/rated load	Q	kg	1500				
	1.6	Load centre distance	c	mm	600				
	1.8	Load distance, centre of drive axle to fork	x	mm	768				
	1.9	Wheelbase	y	mm	1218				
Weight	2.1	Service weight (without battery)		kg	581.6	604.6	634.6	666.6	702.6
	2.2	Service weight (with 71Ah battery)		kg	628	651	681	713	749
	2.3	Service weight (with 89Ah battery)		kg	633.2	656.2	686.2	718.2	754.2
	2.4	Axle loading, laden front/rear		kg	645/1506				
	2.5	Axle loading, unladen front/rear		kg	488/163				
Tyres, chassis	3.1	Wheels			Polyurethane				
	3.2	Wheel size, front	Ø x width	mm	Ø210x70				
	3.3	Wheel size, rear	Ø x width	mm	Ø100X64				
	3.5	Wheels, number front/rear (x = driven wheels)			1x + 0 /2				
	3.7	Tread, rear	b11	mm	1060/1200/1340				
Dimensions	4.2	Lowered mast height	h1	mm	1520	1770	2020	2170	2270
	4.4	Lift height	h3	mm	2000	2500	3000	3300	3500
	4.5	Extended mast height	h4	mm	2520	3020	3520	3820	4020
	4.9	Height of tiller in driving position, min./max.	h14	mm	910/1270				
	4.15	Height, lowered	h13	mm	60±2				
	4.19	Overall length	l1	mm	1698				
	4.20	Length to face of forks	l2	mm	628				
	4.21.1	Overall width across chassis	b1	mm	820				
	4.21.2	Overall width across all/Outer width straddle	b2	mm	1150/1290/1430				
	4.21.5	Inner width straddle	b14	mm	970/1110/1250				
	4.22	Fork dimensions	s/e/l	mm	40X100X1070(1150/1220)				
	4.25	Width over forks	b5	mm	200-795				
	4.32	Ground clearance, centre of wheelbase	m2	mm	40				
	4.34.1	Aisle width for pallets 1000 × 1200 crossways	Ast	mm	2290				
	4.34.2	Aisle width for pallets 800 × 1200 lengthways	Ast	mm	2217				
	4.35	Turning radius	Wa	mm	1455				
Performance data	5.1	Travel speed, with/without load		km/h	4/4.5				
	5.2	Lift speed, without load		mm/s	0-185				
		Lift speed, with load		mm/s	0-101				
	5.3	Lowering speed, without load		mm/s	22-208				
		Lowering speed, with load		mm/s	26-137				
	5.8	Max. gradeability, with/without load		%	5/10				
	5.10	Service brake			Electromagnetic				
Electric-engine	6.1	Drive motor rating S2 60 min		kW	0.75				
	6.2	Lift motor rating at S3 15%		kW	2.5				
	6.4	Battery voltage/nominal capacity K5		V/Ah	● 12/71 x 2 ○ (12/89) x 2				
	6.5	Battery weight +/- 5%		kg	● 23.4 x 2(71Ah)/ ○ 25.8 x 2(89Ah)				
	6.6	Charger		A	10				
Addition Data	8.1	Type of drive control			DC speed control				
	8.4	Sound level at the driver's ear according to EN 12053		dB(A)	<75				

Note: 1kgs=2.2lbs, 25.4mm=1inch

● standard ○ option

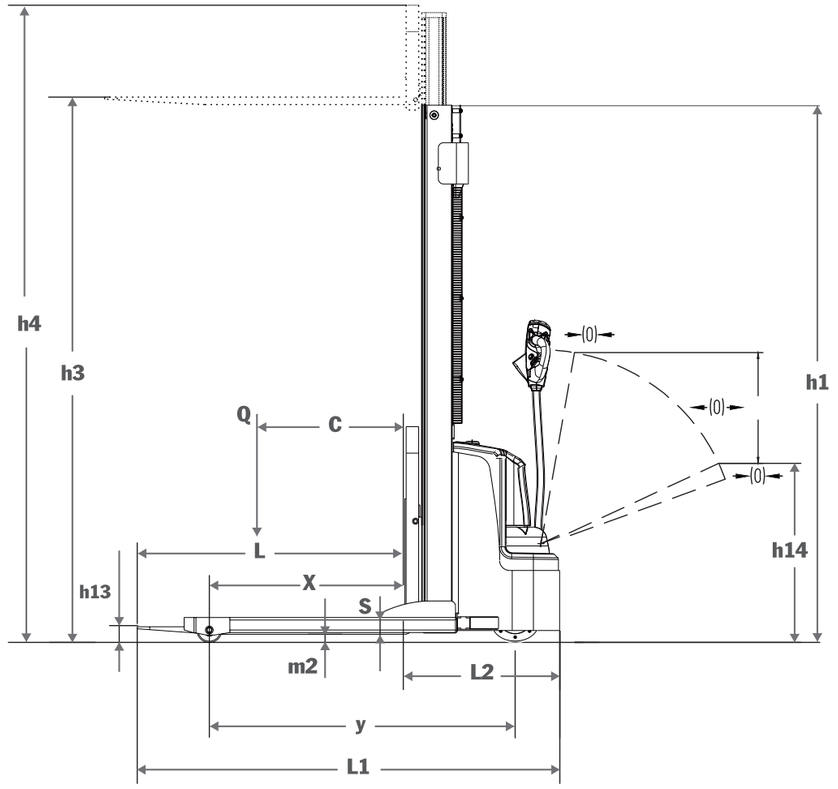

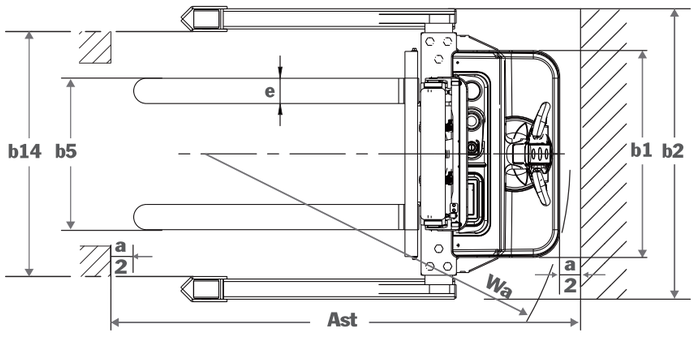

Mast Dimensions

Mast types	Lift height h3(mm)	Lowered mast height h1(mm)	Free lift height h2(mm)	Extended mast height h4(mm)
Duplex Mast	2000	1520	/	2520
	2500	1770	/	3020
	3000	2020	/	3520
	3300	2170	/	3820
	3500	2270	/	4020

LOAD CHART

