MATERIAL HANDLING SOLUTIONS
Via Buffalora, 3 – 25135 Brescia
info@mhs.srl · www.mhs.srl

EFFICIENT



HANGCHA

Factory site: 666 Xiangfu Road,

Follow us on Facebook

Follow us on YouTube

Follow us on WeChat

Download "Hangcha Forklift" App

ISO45001
ISO45001:2018

ISO14001
ISO14001:2015

ISO9001
ISO9001:2015

HANGCHA trucks conform to the European Safety Requirements.

2025 VERSION 3#COPYRIGHT 2025/04

colors, equipment, or specifications detailed in this brochure, or to discontinue individual models. The colors of trucks, delivered may differ slightly from those in brochures.

XC Series
4-W Electric Forklift Truck
With Lithium Iron-Phosphate

with capacity of 4,000 to 5,000kg

LI-ION TECHNOLOGY
INNOVATIVE LITHIUM-ION



The World of Hangcha
SINCE 1956

HANGCHA

INNOVATIVE SOLUTIONS
NEW POWER NOW

The XC series forklift truck powered by lithium battery, with their world-first architecture and advanced design concepts, have made significant breakthroughs in ergonomics, efficiency, and comfort. To maintain its leading position in the industry, HANGCHA has improved and upgraded the AC asynchronous motor, launching the model with a permanent magnet synchronous motor platform.

HANGCHA's lithium battery with Innovative, reliable lithium-ion technology provide better experience, higher efficiency and more energy-saving.
Rapid charging and opportunity charging ensure continuous availability of trucks. Lightweight design, flexible, high level of energy efficiency, maintenance-free, long service life.

LI-ION TECHNOLOGY

HANGCHA provides Li-ion battery (LiFeP04) with 6 years or 12000 hours warranty.



EVE battery packs

	Pack1	Pack2	Pack3
	4 - 5t	4 - 5t	4 - 5t
Battery capacity (kW·h)	76.8V*608Ah, 46.69Kwh	76.8V*840Ah, 64.51Kwh	76.8V*912Ah, 70.04Kwh(Charger with dual charging ports)

Large-capacity CATL battery packs (Optional)

Integrated Battery Management System (BMS) continually monitors energy management and ensures reliable operation.
HANGCHA provides Li-Ion battery with 6 years or 12000 hours warranty.

	Pack1	Pack2
	4 - 5t	4 - 5t
Battery capacity (kW·h)	80V*604Ah, 48.32Kwh	80V*906Ah, 72.48Kwh (Charger with dual charging ports)

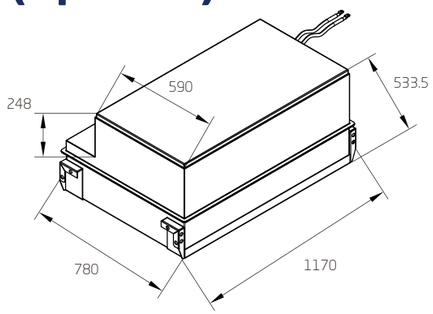

Excellent Ergonomic Design

/ The truck has a large operating space more than **50%** larger than the traditional electric truck.
/ The dashboard in the driver's cab is placed overhead and can be seen when the driver lifts her/his head, and the function buttons can be pressed easily.
/ For the optional integrated fingertip operating system, the combined operation armrest integrates the emergency shut-off, horn and quadruple thumb switches, etc., is electrically controlled through the CAN bus, and is highly reliable.
/ The enlarged brake pedal and appropriate regenerative braking function can effectively reduce the driver's fatigue.







Advantages



The rear axle is provided with a flexible suspension system (for standard configuration and with turning and deceleration functions) to effectively filter the road clutter and improve the driver's comfort.

The noise can be as low as 73dBA.

The high-frequency MOSFET integrated controller ensures smooth and accurate driving and lifting control, and has excellent speed regulation performance, good performance of electronic control matching the motor, functions of regenerative braking, reverse braking and anti-sliding on ramps, etc., and high safety and reliability.

The ultra-high power AC traction motor has a bridge structure.

An ultra-high power AC pump motor is used. The system has high efficiency, complete protection functions, built-in speed and temperature sensors, and greatly improved reliability and life.

RELIABLE TRUCKS

Easy operations and maintenance

With the fully sealed hood and side plates, all major components including the electrically controlled components, motor, electrical components, etc. are sealed from dust and water.

The drive motor of a high protection level is dustproof and waterproof and highly reliable.

The packs can be easily removed by a manual or electric cart, and can be repaired and maintained conveniently.

The hood (with a self-locking gas spring) can be opened at a large angle facilitating the maintenance and replacement of the battery.





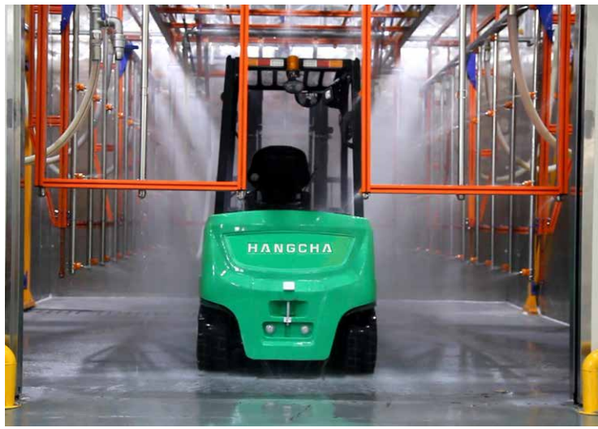

The water resistance level of the vehicle is IPX4.

Energy saving and high efficiency

With the support of the 80V dual permanent magnet synchronous motor system, the truck has undergone national standard tests and achieved a 27% reduction in energy consumption;

The travelling speed, lifting speed, and climbing ability are all about 6% higher than the AC motor model, making it more efficient.

80V
VOLTAGE
DUAL
PERMANENT MAGNET SYNCHRONOUS DRIVE MOTOR





Safety

The optional descending lock function can disable the descending function when the driver leaves the seat and enable high safety.

The standard configuration provides a fork descending buffering function. In addition, an optional electronic control function for buffering the fork's ascending is provided to protect the goods from falling and damaging the ground.

The handbrake can be optionally equipped with an alarm buzzer to prompt the driver to pull up the handbrake before leaving the truck.

Three horn buttons are provided, which are respectively on the driver's steering wheel, thumb switch equipped armrest (optional) and reverse armrest (optional), for alerting and protecting the surrounding people.



A PIN code should be provided before entering the system. 99 sets of PIN codes are available for the administrator. The truck is highly secured and irrelevant personnel cannot start the truck.



Main Accessories

The main electrical components such as the controller, contactor, power plug, emergency cut-off switch, dashboard, accelerator, are all products of well-known world brands.

The emergency cut-off switch equipped for the standard configuration complies with EU regulations.

The truck has passed the CE certification.

Electronic and hydraulic overload protection devices.



Quick charge < 2.0h
(Optional charger)



Comfort

Owing to the low center of gravity and good stability, the driver feels comfortable during turning.

The ergonomically designed tilt-adjustable small-diameter steering wheel makes the driver feel good. The seat can be adjusted back and forth by 210mm. The operator can choose the best driving position.

The intelligent sensing enables buffered descending. When the fork is 100 - 60mm away from the ground, the descending will automatically slow down, so that the goods and pallet will not hit the ground and the goods and ground can be protected effectively.

With friendly human-computer interfaces, the new large-screen LED instruments have good visibility and clear readings.

Silence, no pollution, energy saving and other advantages meet the environmental protection requirements.



The wide-view mast with optimized design is unlikely to obstruct the operator's line of sight. The enlarged opening size of the fork carriage enables a wider view.



Grammer fingertip (Optional)

Options

/ Lithium packs (roller type) that can be replaced quickly
/ Start with a PIN code or by swiping a card
/ Ultra-elastic solid nose tire
/ Environmentally-friendly colored solid tire
/ Left and right rearview mirrors
/ Reversing video
/ Front/rear blue lights
/ Rear operation lights
/ Dedicated lithium battery charger
/ Cold storage vehicle
/ Reverse armrest (containing a horn button)
/ Hood with a key lock
/ OPS seat sensing function
/ Fork ascending buffering
/ Triple multiway valve
/ Quadruple multiway valve
/ Quintuple multiway valve
/ Widened / heightened load backrest
/ Widened fork carriage
/ Forks of other lengths
/ Free duplex mast
/ Free triplex mast
/ Built-in side shifter
/ Accessories of other specifications
/ Grammer MSG531 suspension seat
/ Tool box, folder
/ Integrated fingertip control system including ergonomic armrests

Standard specification

/ High-power AC drive motor
/ High-power AC oil pump motor
/ Silent gear pump
/ Multi-function color screen instrument cluster
/ Large integral rubber pedal pad
/ Stamped iron hood, stamped iron side plates
/ Stamped stainless steel boarding step
/ The gas spring of the hood with a touch-proof mechanism
/ Handbrake with a touch-proof mechanism
/ Turning deceleration function
/ Smart cloud module
/ Fork descending buffering
/ SPE power selection
/ Mileage display, operating time display
/ Integrated fuse box
/ Charging muzzle meeting national standards
/ DC-DC converter
/ Electronic cooling fan
/ Doublet multiway valve
/ Emergency shut-off switch
/ Reversing buzzer
/ Traction pin
/ Load sensing steering system
/ Standard duplex mast, fork, fork carriage and load backrest
/ Lithium packs with low temperature electric heating systems
/ LED combination headlights, LED rear combination three-color taillights

4.0t XC series mast specification

Type	Model	Max. Fork Height	Lowered	Overall height		Free lift		Tilting range	Load capacity	
									4.0t load capacity at 500mm	
				Without backrest	With backrest	Without backrest	With backrest	F/R	Single Tire	Double Tire
		mm	mm	mm	mm	mm	mm	(°)	kg	kg
STD .Duplex	XPDX50M265	2650	2075	3445	3820	150	150	5/10	4000	4000
	XPDX50M300	3000	2250	3795	4170	150	150	5/10	4000	4000
	XPDX50M330	3300	2400	4095	4470	150	150	5/10	4000	4000
	XPDX50M370	3700	2600	4495	4870	150	150	5/10	4000	4000
	XPDX50M400	4000	2825	4825	5170	150	150	5/10	4000	4000
	XPDX50M450	4500	3075	5325	5670	150	150	5/6	4000	4000
	XPDX50M500	5000	3400	5900	6170	150	150	5/6	4000	4000
	XPDX50M550	5500	3650	6400	6670	150	150	5/6	3700	4000
	XPDX50M600	6000	3900	6900	7170	150	150	5/6	3600	3700
Full Free Lift	XPDX50U265	2650	2075	3420	3820	1310	905	5/10	4000	4000
	XPDX50U300	3000	2250	3770	4170	1485	1080	5/10	4000	4000
	XPDX50U330	3300	2400	4070	4470	1635	1230	5/10	4000	4000
	XPDX50U350	3500	2500	4270	4670	1735	1330	5/10	4000	4000
	XPDX50U370	3700	2600	4470	4870	1835	1430	5/10	4000	4000
	XPDX50U400	4000	2825	4825	5170	2060	1655	5/10	4000	4000
Triplex	XPDX50N400	4000	2075	4775	5170	1305	905	5/10	4000	4000
	XPDX50N430	4300	2180	5075	5470	1410	1010	5/6	4000	4000
	XPDX50N450	4500	2250	5275	5670	1480	1080	5/6	4000	4000
	XPDX50N470	4700	2315	5475	5870	1545	1145	5/6	4000	4000
	XPDX50N480	4800	2400	5700	5970	1630	1230	5/6	4000	4000
	XPDX50N500	5000	2450	5850	6170	1680	1280	5/6	3800	4000
	XPDX50N550	5500	2600	6300	6670	1830	1430	5/6	3700	4000
	XPDX50N600	6000	2825	6825	7170	2055	1655	5/6	3600	3700
	XPDX50N650	6500	3075	7375	7670	2305	1905	5/6	/	3600
	XPDX50N700	7000	3300	8000	8170	2530	2130	5/6	/	3400

Mini5.0t XC series mast specification

Type	Model	Max. Fork Height	Lowered	Overall height		Free lift		Tilting range	Load capacity	
									mini5.0t load capacity at 500mm	
				Without backrest	With backrest	Without backrest	With backrest	F/R	Single Tire	Double Tire
		mm	mm	mm	mm	mm	mm	(°)	kg	kg
STD .Duplex	XPDX50M265	2650	2075	3445	3820	150	150	5/10	4990	4990
	XPDX50M300	3000	2250	3795	4170	150	150	5/10	4990	4990
	XPDX50M330	3300	2400	4095	4470	150	150	5/10	4990	4990
	XPDX50M370	3700	2600	4495	4870	150	150	5/10	4990	4990
	XPDX50M400	4000	2825	4825	5170	150	150	5/10	4990	4990
	XPDX50M450	4500	3075	5325	5670	150	150	5/6	4990	4990
	XPDX50M500	5000	3400	5900	6170	150	150	5/6	4700	4990
	XPDX50M550	5500	3650	6400	6670	150	150	5/6	4400	4700
	XPDX50M600	6000	3900	6900	7170	150	150	5/6	4000	4200
Full Free Lift	XPDX50U265	2650	2075	3420	3820	1310	905	5/10	4990	4990
	XPDX50U300	3000	2250	3770	4170	1485	1080	5/10	4990	4990
	XPDX50U330	3300	2400	4070	4470	1635	1230	5/10	4990	4990
	XPDX50U350	3500	2500	4270	4670	1735	1330	5/10	4990	4990
	XPDX50U370	3700	2600	4470	4870	1835	1430	5/10	4990	4990
	XPDX50U400	4000	2825	4825	5170	2060	1655	5/10	4990	4990
Triplex	XPDX50N400	4000	2075	4775	5170	1305	905	5/10	4990	4990
	XPDX50N430	4300	2180	5075	5470	1410	1010	5/6	4990	4990
	XPDX50N450	4500	2250	5275	5670	1480	1080	5/6	4800	4990
	XPDX50N470	4700	2315	5475	5870	1545	1145	5/6	4700	4800
	XPDX50N480	4800	2400	5700	5970	1630	1230	5/6	4700	4800
	XPDX50N500	5000	2450	5850	6170	1680	1280	5/6	4500	4700
	XPDX50N550	5500	2600	6300	6670	1830	1430	5/6	4400	4500
	XPDX50N600	6000	2825	6825	7170	2055	1655	5/6	4100	4400
	XPDX50N650	6500	3075	7375	7670	2305	1905	5/6	/	4100
	XPDX50N700	7000	3300	8000	8170	2530	2130	5/6	/	3800

4.5t XC series mast specification

Type	Model	Max. Fork Height	Lowered	Overall height		Free lift		Tilting range	Load capacity	
									4.5t load capacity at 500mm	
				Without backrest	With backrest	Without backrest	With backrest	F/R	Single Tire	Double Tire
		mm	mm	mm	mm	mm	mm	(°)	kg	kg
STD .Duplex	XPDX50M265	2650	2075	3445	3820	150	150	5/10	4500	4500
	XPDX50M300	3000	2250	3795	4170	150	150	5/10	4500	4500
	XPDX50M330	3300	2400	4095	4470	150	150	5/10	4500	4500
	XPDX50M370	3700	2600	4495	4870	150	150	5/10	4500	4500
	XPDX50M400	4000	2825	4825	5170	150	150	5/10	4500	4500
	XPDX50M450	4500	3075	5325	5670	150	150	5/6	4500	4500
	XPDX50M500	5000	3400	5900	6170	150	150	5/6	4400	4400
	XPDX50M550	5500	3650	6400	6670	150	150	5/6	4000	4200
	XPDX50M600	6000	3900	6900	7170	150	150	5/6	3600	3800
Full Free Lift	XPDX50U265	2650	2075	3420	3820	1310	905	5/10	4500	4500
	XPDX50U300	3000	2250	3770	4170	1485	1080	5/10	4500	4500
	XPDX50U330	3300	2400	4070	4470	1635	1230	5/10	4500	4500
	XPDX50U350	3500	2500	4270	4670	1735	1330	5/10	4500	4500
	XPDX50U370	3700	2600	4470	4870	1835	1430	5/10	4500	4500
	XPDX50U400	4000	2825	4825	5170	2060	1655	5/10	4500	4500
Triplex	XPDX50N400	4000	2075	4775	5170	1305	905	5/10	4500	4500
	XPDX50N430	4300	2180	5075	5470	1410	1010	5/6	4500	4500
	XPDX50N450	4500	2250	5275	5670	1480	1080	5/6	4400	4500
	XPDX50N470	4700	2315	5475	5870	1545	1145	5/6	4300	4400
	XPDX50N480	4800	2400	5700	5970	1630	1230	5/6	4300	4400
	XPDX50N500	5000	2450	5850	6170	1680	1280	5/6	4250	4300
	XPDX50N550	5500	2600	6300	6670	1830	1430	5/6	4200	4250
	XPDX50N600	6000	2825	6825	7170	2055	1655	5/6	3800	4000
	XPDX50N650	6500	3075	7375	7670	2305	1905	5/6	/	3800
	XPDX50N700	7000	3300	8000	8170	2530	2130	5/6	/	3400

5.0t XC series mast specification

Type	Model	Max. Fork Height	Lowered	Overall height		Free lift		Tilting range	Load capacity	
									5.0t load capacity at 600mm	
				Without backrest	With backrest	Without backrest	With backrest	F/R	Single Tire	Double Tire
		mm	mm	mm	mm	mm	mm	(°)	kg	kg
STD .Duplex	XPD50M235	2350	2075	3250	3580	150	150	5/10	5000	5000
	XPD50M270	2700	2250	3600	3930	150	150	5/10	5000	5000
	XPD50M300	3000	2350	3875	4230	150	150	5/10	5000	5000
	XPD50M330	3300	2500	4175	4530	150	150	5/10	5000	5000
	XPD50M370	3700	2825	4675	4930	150	150	5/10	5000	5000
	XPD50M400	4000	2975	4975	5230	150	150	5/10	5000	5000
	XPD50M450	4500	3300	5550	5730	150	150	5/6	5000	5000
	XPD50M500	5000	3550	6050	6230	150	150	5/6	4700	4900
	XPD50M550	5500	3800	6550	6730	150	150	5/6	4400	4600
	XPD50M600	6000	3900	7050	7230	150	150	5/6	4100	4400
Full Free Lift	XPD50U280	2800	2250	3650	4030	1405	1020	5/10	5000	5000
	XPD50U300	3000	2350	3850	4230	1505	1120	5/10	5000	5000
	XPD50U330	3300	2500	4150	4530	1655	1270	5/10	5000	5000
	XPD50U350	3500	2600	4350	4730	1752	1370	5/10	5000	5000
	XPD50U400	4000	2925	4925	5230	2080	1695	5/10	5000	5000
Triplex	XPD50N405	4050	2180	4900	5280	1335	950	5/6	5000	5000
	XPD50N430	4300	2250	5150	5530	1405	1020	5/6	5000	5000
	XPD50N450	4500	2315	5350	5730	1470	1085	5/6	4800	5000
	XPD50N470	4700	2415	5550	5930	1570	1185	5/6	4700	4800
	XPD50N500	5000	2500	5850	6230	1655	1270	5/6	4600	4700
	XPD50N550	5500	2850	6550	6730	2005	1620	5/6	4400	4600
	XPD50N600	6000	3125	7125	7230	2280	1895	5/6	4100	4400
	XPD50N650	6500	3325	7625	7730	2480	2095	5/6	/	3800
	XPD50N700	7000	3450	8150	8230	2605	2220	3/6	/	3600

Technical data

Distinguishing mark	1.1	Manufacturer					
	1.2	Manufacturers type designation		CPD40-XD6-SI2B*	CPD45-XD6-SI2B*	CPD50-XXD6-SI2B*	CPD50-XD6-SI2B*
	1.3	Drive: electric (battery or mains), diesel, petrol, fuel gas		Electric	Electric	Electric	Electric
	1.4	Operator type: hand, pedestrian, standing, seated, order-picker		Seated	Seated	Seated	Seated
	1.5	Load capacity/rated load	Q (kg)	4000	4500	5000	5000
	1.6	Load centre distance	c (mm)	500	500	500	600
	1.7	Load distance, centre of drive axle to fork	x (mm)	520	520	520	530
	1.8	Wheelbase	y (mm)	1950	1950	1950	1950
Weight	2.1	Service Weight	kg	5830	6200	6870	7150
	2.2	Axle loading, laden front/rear	kg	8110/1720	9525/1175	10554/1316	10810/1340
	2.3	Axle loading, unladen front/rear	kg	2625/3204	2790/3410	2900/3970	2930/4220
Tyres, chassis	3.1	Tyres: solid rubber, super elastic, pneumatic, polyurethane		Pneumatic	Pneumatic	Pneumatic	Pneumatic
	3.2	Tyre size, front		250-15	250-15	28*12.5 - 15	28*12.5 - 15
	3.3	Tyre size, rear		23*9 - 10	23*9 - 10	23*9 - 10	23*9 - 10
	3.4	Wheels, number front rear (x = driven wheels)		2*/2	2*/2	2*/2	2*/2
	3.5	Tread, front	b_{10} (mm)	1118	1118	1155	1155
	3.6	Tread, rear	b_{11} (mm)	1110	1110	1110	1110
Dimensions	4.1	Tilt of mast/fork carriage forward/backward	Grad	5/10	5/10	5/10	5/10
	4.2	Height, mast lowered	h_1 (mm)	2250	2250	2250	2350
	4.3	Free lift	h_2 (mm)	150	150	150	150
	4.4	Lift	h_3 (mm)	3000	3000	3000	3000
	4.5	Height, mast extended	h_4 (mm)	4170	4170	4170	4170
	4.6	Height of overhead guard STD.(cabin)	h_6 (mm)	2270(2350)	2270(2350)	2270(2350)	2270(2350)
	4.7	Coupling height	h_{10} (mm)	530	530	530	530
	4.8	Overall length	l_1 (mm)	3911	3911	3916	3921
	4.9	Length to face of forks	l_2 (mm)	2841	2841	2846	2851
	4.21	Overall width(single/dual front tyres)	b_1 (mm)	1425/1930	1425/1930	1425/1930	1425/1930
	4.22	Fork dimensions	s/e/l (mm)	50*122*1070	50*150*1070	50*150*1070	60*150*1070
	4.23	Fork carriage DIN 15 173 --- ISO 2328, class/type A,B		ISO 2328 3A	ISO 2328 3A	ISO 2328 3A	ISO 2328 4A
	4.24	Fork-carriage width	b_3 (mm)	1250	1250	1250	1250
	4.25	Distance between fork-arms	b_5 (mm)	310/1250	310/1250	310/1250	310/1250
	4.31	Ground clearance, laden, below mast	m_1 (mm)	150	150	150	150
	4.32	Ground clearance, centre of wheelbase	m_2 (mm)	150	150	150	150
	4.33	Aisle width for pallets 1000 x 1200 crossways	A_{st} (mm)	4270	4270	4270	4280
	4.34	Aisle width for pallets 800 x 1200 Lengthways	A_{st} (mm)	4470	4470	4470	4480
	4.35	Turning radius	W_a (mm)	2550	2550	2550	2550
	4.36	Internal turning radius	b_{13} (mm)	730	730	730	730
Performance Data	5.1	Travel speed, laden/unladen	km/h	18/18	18/18	18/18	18/18
	5.2	Lift speed, laden/unladen	m/s	0.350/0.430	0.350/0.430	0.350/0.430	0.350/0.450
	5.3	Lowering speed, laden/unladen	m/s	0.430/0.480	0.430/0.480	0.430/0.480	0.430/0.480
	5.4	Drawbar pull, laden/unladen	N	18600/20000	18800/20200	20000/20600	20300/20800
	5.5	Max. Drawbar pull, laden/unladen	N	23000	24000	26000	28000
	5.6	Gradeability, laden/unladen	%	15/20	15/20	15/20	15/20
	5.7	Acceleration time, laden/unladen (0-10m)	s	5.0/4.8	5.2/5.0	5.6/5.3	5.8/5.4
	5.8	Service brake		Hydraulic	Hydraulic	Hydraulic	Hydraulic
	5.9	Parking brake		Mechanical	Mechanical	Mechanical	Mechanical
Electric-engine	6.1	Drive motor rating S2 60 min	kW	23	23	23	23
	6.2	Lift motor rating at S3 15%	kW	28	28	28	28
	6.3	Battery voltage, Std	V/Ah	80/608	80/608	80/608	80/608
	6.4	Standard Weight of lithium iron phosphate battery	kg	430	430	430	430
	6.5	Min. battery weight	kg	430	430	430	430
	6.6	Max. battery weight	kg	600	600	600	600
Addition data	8.1	Type of drive control		MOSFET/AC	MOSFET/AC	MOSFET/AC	MOSFET/AC
		Manufacturer		INMOTION	INMOTION	INMOTION	INMOTION
		Control Model		ACS80XL-550C	ACS80XL-550C	ACS80XL-550C	ACS80XL-550C
	8.2	Operating pressure for attachments	bar	185	185	185	185
	8.3	Oil volume for attachments	l/min	65	65	65	65
	8.4	Sound level at the driver´s ear according to EN / DIN 12 053	dB (A)	75	75	75	75
	8.5	Towing coupling, type DIN		Φ35 Pin	Φ35 Pin	Φ35 Pin	Φ35 Pin
	9.1	Hydraulic Tank - capacity (drain & refill)	liter	46	46	46	46

Note: * CE model

Technical data(Permanent magnet synchronous)

Distinguishing mark	1.1	Manufacturer					
	1.2	Manufacturer's type designation		CPD40-XCY2-SI	CPD45-XCY2-SI	CPD50-XCXY2-SI	CPD50-XCY2-SI
	1.3	Drive: electric (battery or mains), diesel, petrol, fuel gas		Electric	Electric	Electric	Electric
	1.4	Operator type: hand, pedestrian, standing, seated, order-picker		Seated	Seated	Seated	Seated
	1.5	Rated capacity/rated load	kg	4000	4500	5000	5000
	1.6	Load centre distance	c (mm)	500	500	500	600
	1.8	Load distance, centre of drive axle to fork	x (mm)	520	520	520	530
	1.9	Wheelbase	y (mm)	1950	1950	1950	1950
Weight	2.1	Service Weight	kg	6040	6400	6870	7150
	2.2	Axle loading, laden front/rear	kg	8849/1191	9636/1264	10417/1453	10750/1400
	2.3	Axle loading, unladen front/rear	kg	2756/3284	2782/3618	2801/4069	2853/4297
Tyres, chassis	3.1	Tyres: solid rubber, superelastic, pneumatic, polyurethane		Pneumatic	Pneumatic	Pneumatic	Pneumatic
	3.2	Tyre size, front		250-15/2	250-15/2	28*12.5-15/2	28*12.5-15/2
	3.3	Tyre size, rear		23*9-10/2	23*9-10/2	23*9-10/2	23*9-10/2
	3.5	Wheels, number front / rear (x = driven wheels)		2x/2	2x/2	2x/2	2x/2
	3.6	Tread, front	b_{10} (mm)	1155	1155	1155	1155
	3.7	Tread, rear	b_{11} (mm)	1110	1110	1110	1110
Dimensions	4.1	Tilt of mast/fork carriage forward/backward	a/b (°)	5/10	5/10	5/10	5/10
	4.2	Height, mast lowered	h_1 (mm)	2250	2250	2250	2350
	4.3	Free lift	h_2 (mm)	150	150	150	150
	4.4	Lift	h_3 (mm)	3000	3000	3000	3000
	4.5	Height, mast extended	h_4 (mm)	4170	4170	4170	4170
	4.7	Height of overhead guard(cabin)	h_6 (mm)	2270(2350)	2270(2350)	2270(2350)	2270(2350)
	4.8	Seat height/stand height	h_7 (mm)	1270	1270	1270	1270
	4.12	Coupling height	h_{10} (mm)	455	455	455	455
	4.19	Overall length	l_1 (mm)	4714	4714	4714	4724
	4.20	Length to face of forks	l_2 (mm)	2844	2844	2844	2854
	4.21	Overall width(single/dual front tyres)	b_1/b_2 (mm)	1425/1930	1425/1930	1425/1930	1425/1930
	4.22	Fork dimensions	s/e/l(mm)	50/122/1070	50/150/1070	50/150/1070	60/150/1070
	4.23	Fork carriage ISO 2328, class/type A,B		ISO2328 3A	ISO2328 3A	ISO2328 3A	ISO2328 4A
	4.24	Fork-carriage width	b_3 (mm)	1250	1250	1250	1250
	4.31	Ground clearance, laden, below mast	m_1 (mm)	150	150	150	150
	4.32	Ground clearance, centre of wheelbase	m_2 (mm)	150	150	150	150
	4.34.1	Aisle width for pallets 1000 x 1200 crossways	A_{st} (mm)	4270	4270	4270	4280
	4.34.2	Aisle width for pallets 800 x 1200 lengthways	A_{st} (mm)	4470	4470	4470	4480
	4.35	Turning radius	W_a (mm)	2550	2550	2550	2550
	4.36	Internal turning radius	b_{13} (mm)	730	730	730	730
Performance Data	5.1	Travel speed, laden/unladen	km/h	19/20	19/20	19/20	19/20
	5.2	Lift speed, laden/unladen	mm/s	350/460	350/460	350/460	350/460
	5.3	Lowering speed, laden/unladen	mm/s	480/400	480/400	480/400	480/400
	5.6	Max. Drawbar pull, laden/unladen	N	21000	21000	21000	21000
	5.8	Max. gradeability, laden/unladen	%	16/20	16/20	16/20	16/20
	5.10	Service brake		Hydraulic	Hydraulic	Hydraulic	Hydraulic
	5.11	Parking brake		Mechanical	Mechanical	Mechanical	Mechanical
Electric-engine	6.1	Drive motor rating S2 60 min	kW	25	25	25	25
	6.2	Lift motor rating at S3 15%	kW	28	28	28	28
	6.4	Battery voltage, nominal capacity	(V)/(Ah) or kWh	80/608	80/608	80/608	80/608
	6.5	Battery weight	kg	≥430	≥430	≥430	≥430
Addition data	10.1	Operating pressure for attachments	MPa	16	16	16	16
	10.2	Oil volume for attachments	ℓ/min	65	65	65	65

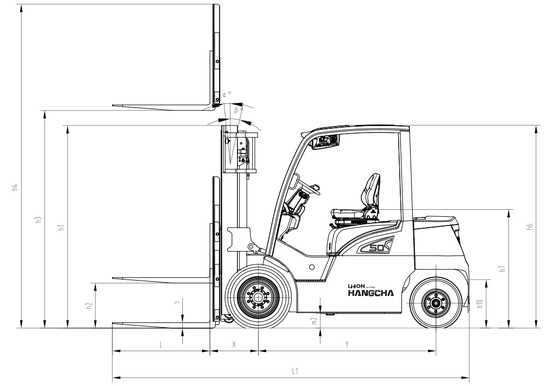

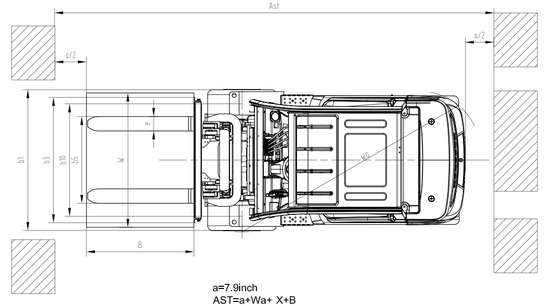

a=7.9inch
AST=a+Wa+ X+B

a=200 mm safety clearance
AST=a+Wa+ X+B

