MATERIAL HANDLING SOLUTIONS
Via Buffalora, 3 – 25135 Brescia
info@mhs.srl · www.mhs.srl

Type	Model	Max. fork height	Overall height				Free lift				Front Overhang		Tilt range		Capacity			
			Lowered		Extended										Load capacity at 500mm			
					Without backrest		With backrest		Without backrest		With backrest				Single tire		Dual tire	
		mm	mm	mm	mm	mm	mm	mm	mm	mm	mm	mm	mm	mm	(°)	(°)	4.0t	4.5t	4.0t	4.5t
			4/4.5t		4/4.5t		4/4.5t		4/4.5t		4/4.5t						kg	kg	kg	kg
Wide view full free duplex mast	X45M250	2500	1995	2245	3330	3580	3670	3920	160	170	160	170	555	585	6	12	4000	4500	4000	4500
	X45M270	2700	2095	2345	3530	3780	3870	4120	160	170	160	170	555	585	6	12	4000	4500	4000	4500
	X45M300	3000	2245	2495	3830	4080	4170	4420	160	170	160	170	555	585	6	12	4000	4500	4000	4500
	X45M330	3300	2395	2645	4130	4380	4470	4720	160	170	160	170	555	585	6	12	4000	4500	4000	4500
	X45M350	3500	2495	2745	4330	4580	4670	4920	160	170	160	170	555	585	6	12	4000	4500	4000	4500
	X45M360	3600	2545	2795	4430	4680	4770	5020	160	170	160	170	555	585	6	12	4000	4500	4000	4500
	X45M370	3700	2595	2845	4530	4780	4870	5120	160	170	160	170	555	585	6	12	4000	4500	4000	4500
	X45M380	3800	2645	2895	4630	4880	4970	5220	160	170	160	170	555	585	6	12	4000	4500	4000	4500
	X45M400	4000	2795	2945	4830	5080	5170	5420	160	170	160	170	555	585	6	12	4000	4500	4000	4500
	X45M430	4300	2960	3110	5130	5380	5470	5720	160	170	160	170	555	585	6	6	3850	4300	3900	4400
	X45M450	4500	3070	3220	5330	5580	5670	5920	160	170	160	170	555	585	6	6	3800	4000	3850	4200
	X45M500	5000	3345	3495	5830	6080	6170	6420	160	170	160	170	555	585	6	6	3800	4000	3850	4200
	X45M550	5500	3620	3770	6330	6580	6670	6920	160	170	160	170	555	585	3	6	3000	3500	3200	3800
	X45M600	6000	3895	4045	6830	7080	7170	7420	160	170	160	170	555	585	3	6	2500	3000	2800	3100
Wide view full free duplex mast	X45U250	2500	1976	2226	3365	3615	3670	3920	1114	1112	809	829	557	610	6	12	4000	4500	4000	4500
	X45U275	2750	2100	2350	3615	3865	3920	4170	1238	1236	933	953	557	610	6	12	4000	4500	4000	4500
	X45U300	3000	2226	2476	3865	4115	4170	4420	1364	1362	1055	1079	557	610	6	12	4000	4500	4000	4500
	X45U330	3300	2376	2626	4165	4415	4470	4720	1514	1512	1205	1229	557	610	6	12	4000	4500	4000	4500
	X45U350	3500	2476	2726	4365	4615	4670	4920	1614	1612	1309	1329	557	610	6	12	4000	4500	4000	4500
	X45U360	3600	2526	2776	4465	4715	4770	5020	1664	1662	1359	1379	557	610	6	12	4000	4500	4000	4500
	X45U370	3700	2576	2826	4565	4815	4870	5120	1714	1712	1409	1429	557	610	6	12	4000	4500	4000	4500
Wide view full free triplex mast	X45N400	4000	2080	2330	4850	5100	5170	5420	1229	1227	912	932	603	660	6	6	4000	4500	4000	4500
	X45N430	4300	2180	2430	5155	5405	5470	5720	1329	1327	1012	1032	603	660	6	6	4000	4500	4000	4500
	X45N450	4500	2248	2498	5365	5615	5685	5935	1395	1393	1080	1100	603	660	6	6	3800	4400	4000	4500
	X45N470	4700	2310	2560	5550	5800	5870	6120	1459	1457	1142	1162	603	660	6	6	3700	4300	3800	4400
	X45N480	4800	2340	2590	5650	5900	5970	6220	1489	1487	1172	1192	603	660	6	6	3700	4200	3800	4300
	X45N500	5000	2410	2660	5855	6105	6170	6420	1559	1557	1242	1262	603	660	6	6	3600	3800	3700	4200
	X45N550	5500	2575	2825	6355	6605	6670	6920	1724	1722	1408	1428	603	660	3	6	3000	3400	3200	3800
	X45N600	6000	2790	3040	6865	7115	7180	7430	1939	1937	1622	1642	603	660	3	6	2500	2800	2800	3100
	X45N650	6500	2980	3230	7365	7615	7680	7930	2129	2127	1812	1832	603	660	3	6	/	/	2400	2500
	X45N700	7000	3155	3405	7860	8110	8175	8425	2304	2302	1988	2008	603	660	3	6	/	/	2000	2200

With sideshifter minus 200kg,with integral sideshifter minus 100kg.

5.0~5.5t XF series mast: (pneumatic)

Type	Model	Max. fork height	Overall height						Free lift				Front Overhang		Tilt range		Capacity				
			Lowered		Extended												Load capacity at 500mm				
					Without backrest		With backrest		Without backrest		With backrest						Single tire		Dual tire		
		mm	mm	mm	mm	mm	mm	mm	mm	mm	mm	mm	mm	mm	FWD	BWD	5.0t	5.5t	5.0t	5.5t	
			5.0t	5.5t	5.0t	5.5t	5.0t	5.5t	5.0t	5.5t	5.0t	5.5t	5.0t	5.5t	(°)	(°)	kg	kg	kg	kg	
Wide view mast	XX50/XX55M250	2500	1995	2245	3330	3580	3870	3900	160	170	160	170	555	585	6	12	5000	5500	5000	5500	
	XX50/XX55M270	2700	2095	2345	3530	3780	4070	4100	160	170	160	170	555	585	6	12	5000	5500	5000	5500	
	XX50/XX55M300	3000	2245	2495	3830	4080	4370	4400	160	170	160	170	555	585	6	12	5000	5500	5000	5500	
	XX50/XX55M330	3300	2395	2645	4130	4380	4670	4700	160	170	160	170	555	585	6	12	5000	5500	5000	5500	
	XX50/XX55M350	3500	2495	2745	4330	4580	4870	4900	160	170	160	170	555	585	6	12	5000	5500	5000	5500	
	XX50/XX55M360	3600	2545	2795	4430	4680	4970	5000	160	170	160	170	555	585	6	12	5000	5500	5000	5500	
	XX50/XX55M370	3700	2595	2845	4530	4780	5070	5100	160	170	160	170	555	585	6	12	5000	5500	5000	5500	
	XX50/XX55M380	3800	2645	2895	4630	4880	5170	5200	160	170	160	170	555	585	6	12	5000	5500	5000	5500	
	XX50/XX55M400	4000	2795	2995	4830	5080	5370	5400	160	170	160	170	555	585	6	12	5000	5500	5000	5500	
	XX50/XX55M430	4300	2960	3145	5130	5380	5670	5700	160	170	160	170	555	585	6	6	4750	5150	5000	5400	
	XX50/XX55M450	4500	3070	3245	5330	5580	5870	5900	160	170	160	170	555	585	6	6	4700	5000	4800	5200	
	XX50/XX55M480	4800	3235	3445	5630	5880	6170	6200	160	170	160	170	555	585	6	6	4400	4650	4600	4750	
	XX50/XX55M500	5000	3345	3560	5830	6080	6370	6400	160	170	160	170	555	585	6	6	4100	4400	4300	4600	
	XX50/XX55M550	5500	3620	3820	6330	6580	6870	6900	160	170	160	170	555	585	3	6	3600	4050	4000	4300	
	XX50/XX55M600	6000	3895	4085	6830	7080	7370	7400	160	170	160	170	555	585	3	6	3100	3150	3300	3350	
Wide view full free duplex mast	XX50/XX55U250	2500	1976	2226	3365	3615	3865	3900	1114	1112	610	829	570	610	6	12	5000	5500	5000	5500	
	XX50/XX55U275	2750	2100	2350	3615	3865	4115	4150	1238	1236	735	953	570	610	6	12	5000	5500	5000	5500	
	XX50/XX55U300	3000	2226	2476	3865	4115	4365	4400	1364	1362	860	1079	570	610	6	12	5000	5500	5000	5500	
	XX50/XX55U330	3300	2376	2626	4165	4415	4665	4700	1514	1512	1010	1229	570	610	6	12	5000	5500	5000	5500	
	XX50/XX55U350	3500	2476	2726	4365	4615	4865	4900	1614	1612	1110	1329	570	610	6	12	5000	5500	5000	5500	
	XX50/XX55U360	3600	2526	2776	4465	4715	4965	5000	1664	1662	1160	1379	570	610	6	12	5000	5500	5000	5500	
	XX50/XX55U370	3700	2576	2826	4565	4815	5065	5100	1714	1712	1210	1429	570	610	6	12	5000	5500	5000	5500	
Wide view full free triplex mast	XX50/XX55N400	4000	2080	2305	4860	5110	5365	5400	1222	1195	715	910	615	645	6	6	5000	5500	5000	5500	
	XX50/XX55N430	4300	2180	2405	5160	5410	5665	5700	1322	1295	815	1010	615	645	6	6	4700	5000	4800	5200	
	XX50/XX55N450	4500	2248	2470	5370	5610	5880	5900	1390	1360	883	1075	615	645	6	6	4600	4750	4700	4900	
	XX50/XX55N470	4700	2310	2535	5560	5810	6070	6100	1452	1425	945	1140	615	645	6	6	4500	4600	4600	4800	
	XX50/XX55N480	4800	2340	2570	5660	5910	6170	6200	1482	1460	975	1175	615	645	6	6	4300	4450	4500	4650	
	XX50/XX55N500	5000	2410	2635	5860	6110	6370	6400	1552	1525	1045	1240	615	645	6	6	4000	4200	4250	4500	
	XX50/XX55N550	5500	2575	2805	6360	6610	6870	6900	1718	1695	1210	1410	615	645	3	6	3600	3850	4000	4100	
	XX50/XX55N600	6000	2790	3020	6870	7110	7380	7400	1932	1910	1425	1625	615	645	3	6	3000	3050	3200	3250	
	XX50/XX55N650	6500	2980	3200	7370	7610	7880	7900	2123	2090	1615	1805	615	645	3	6	/	/	2650	2900	
	XX50/XX55N700	7000	3155	3375	7865	8110	8375	8400	2298	2265	1790	1980	615	645	3	6	/	/	2350	2550	

With sideshifter minus 200kg,with integral sideshifter minus 100kg.

HANGCHA

Factory site: 666 Xiangfu Road,

Follow us on Facebook

Follow us on YouTube

Follow us on WeChat

ISO14001:2015

ISO9001:2015

HANGCHA trucksconform to the European Safety Requirements.

2019 VERSION 3COPYRIGHT 2019/12

notice concerning colors, equipment, or specifications detailed in this brochure, or to discontinue individual models. The colors of trucks, delivered may differ slightly from those in brochures.



XF Series Diesel / Gasoline / LPG Counterbalanced Trucks

with capacities of 4,000 to 5,500kg

The World of Hangcha

HANGCHA

HANGCHA with you at every stage

Efficient, reliable solutions for your demands

STAGE V & TIER 4F

With Hangcha you can meet all Stage V/Tier 4f emissions standards which provides customer demands for value, innovation and performance. The technologies include common rail fuel systems, diesel oxidation catalysts (DOC) and diesel particulate filters (DPF). Designed and optimised to every engine model, our forklift truck maximises efficiency and reliability.



XINCHAI



Interactive instrument: The instrument adopts 4.0-inch color LCD display with four interactive buttons, and has one CAN bus communication function. The communication protocol is compatible with CANopen and SAE J1939 standards.

HANGCHA Forklift with StageV and T4F

No.	Capacity	Series	Manufacturer	Engine	Drive power	Model	Emission Std.	Transmission	Power (kw/rpm)
1	4.0-5.5t	XF	KUBOTA	V3307-CR-TIE5B	Diesel	CPCD40/45-XW99BN,CPCD50/55-XXW99BN	Stage V / Tier4 final	OKAMURA	54.6/2200
2	4.0-5.5t	XF	XINCHAI	4E30YG52	Diesel	CPCD40/45-XH8BN,CPCD50/55-XXH8BN	Stage V	OKAMURA	55.8/2200

Note: Stage V applied for European Union also including Israel and Turkey
Tier4 Final applied for North American



Reliability

By focusing on enhancing reliability, reducing downtime, the XF series is able to make the greater productivity for customer.

XF series truck just equip with Okamura transmission. Brake drum and hub adopt monolithic construction.







XF series features rugged design, stamped frame and engine hood, stamped inst-rument panel and head guard, heavy profile rail mast combine to provide excellent rigidity, which ensures outstanding reliability even in heavy-duty work.

Extra capacity combined radiator with serpentine wave and optimized heat dissipation channel enhance the heat dissipation capability to keep engine reliability even in heavy-duty applications.





Bigger diameter of steering cylinder.

Productivity

Dynamic load sensing hydraulic steering system,Efficiency lighting system, lower fuel consumption, combine to provide increased productivity and reduced operating costs.



The new Dynamic load sensing hydraulic steering system contributes to reduce loss of hydraulic and improve energy efficiency.



The new efficiency lighting system employs LED illuminant and new type reflector to reduce energy consumption, improve significantly illumination performance and prolong work time.

Comfortable Operation

Optimal visibility in all directions create the best conditions for high productivity through relaxed and safe working.









The extra foot space is provided to reduce operator fatigue significantly. The new wide-open, non-slip step makes getting in and out easy and safe.

The optional Electro-hydraulic proportional control system contributes more sensitive and precise load handling. The easy-to-operate levers provide total load handling operation. An armrest is provided to reduce fatigue.

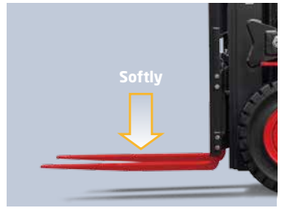

In addition to the soft landing system, the soft lifting system is adopted (front lifting cylinders of triplex mast and full free duplex mast), as a result, the noise and shock of the mast significantly decreases.



The developed front lifting cylinders with smaller outer diameter give the operator superior forward visibility.

The double front lifting cylinders provide better forward visibility.

In developing the new XF Series, comfort and ease of operation is carefully considered, for example, to improve vibration levels, compound engine damper and full floating power train are adopted.
Comfortable operating environments for operator also contribute to increased productivity.



In addition to rubber damper between frames and steering axle, compound engine damper and full floating power train achieve flexible connection between frames and driving system, as a result,traveling vibrations and vibrations from the driving system are significantly reduced.



The enlarged capacity of optimized exhaust muffler,the intake muffler and the noise shield technologies provide sig nificantly lower noise levels.

1. The new, relocated easy-to-see LCD meter lets the operator check on all aspects of operational status at a glance.
2. The new automobile-style light/turn-signal lever and forward-reverse lever are ergonomically designed and arranged to improve comfort and productivity.
3. The small diameter steering wheel with tilt adjustment provides the ideal operating position.The superior responsiveness of the steering wheel optimizes maneuverability even in narrow spaces.
4. The parking brake is specially developed. The operational force is reduced by 30%.
5. The automobile-style suspended pedals provide more ergonomic operation.



Safety

A wide range of technologies are applied to ensure absolute safety for both the operator and those in the surrounding.

An optional rear-pillar assist grip with a horn button enhances safety of operator while traveling in reverse.

The locking device of the engine hood damper and parking brake help add to safety.





1. The operator presence sensing system incorporates lifting / tilting and traveling locking function, When the operator leaves the seat, the system automatically locks lifting / tilting and disables traveling to ensure safety.
2. A throttling device is adopted to avoid the mast being out of control even some pipes are broken.

Easy Maintenance

Careful design facilitates inspection and servicing. Easy maintenance reduces the amount of downtime and helps to reduce cost also.



The new vehicle controller integrates all electrical components, features excellent durability for temperature, water and vibration for most demanding operation.



CUMMINS engine use the special air filter, it can reduce air intake resistance dramatically, equipped with pressure alarm to masterthe maintaining time.



The cover on the Panel can be lifted up simply to check the brake fluid.

The easy-to-operate latch provides quick access to the engine compartment.

The two-piece design makes the floorboard easy to lift and remove for access to the power train.

The fasteners of the radiator cover can be turned easily by hand to enable quick inspections or servicing.

Standards

Transmission	Steering	Chassiss	Control	Hydraulic
/ Suspension transmission / Oil filter / Dipstick / Oil cooler / Non-asbesttos bake	/ Full hydraulic power steering / Smaller diameter steering wheel / Adjuster of steering wheel	/ Anti-slip pedal / Rubber pedal / Engine hood spring	/ Power steering / Suspension pedal / Integrated combination switch / Cable parking brake	/ Dynamic load sending control valve (Diesel IC) / Hydraulic oil filter / Tilt cylinder self-lock valve / Hydraulic oil dipstick / Dual pump

Truck		Electronics		Mast
/ Traction device / Hand grip / Standard seat / Standard overhead guard / Waterproof cover on the guard / Back view mirror / Pneumatic tyres / Toolbox	/ Counterweight net / Fan protector / Big capacity aluminum radiator / Whirlwind air cleaner / Safety filter / High-efficient intake muffler / High-efficient exhaust muffl / Upright exhaust pipe	/ High-efficient front lights / High-efficient LED rear lights / Maintenance-free battery / Combination controller / LCD display / Neutual switch / Hour meter / Fuel gauge	/ Water temperature gauge / Pre-heat indicator / Charging indicator / Oilpressure warning / Transmission oil pressure warning / Horn / Reversing buzzer	/ Standard wide view duplex mast / Standard forks / Standard fork carriage / Standard load backrest / Mast speed limiting valve / Loading relieve valve / Softlanding system / Softlifting system / Side roller

Options

Truck	Transmission	Power	Hydraulic	Electronics	Mast
/ Cabin / Cabin heater / Front window / Super elastic tyre / Non-mark tyre(white/green) / Suspension seat / Extinguisher / Cover of tilt cylinder / Heightening overhead guard / Reversing assist grip / Customer painting / OPS(Operator Presence Sensing system) / Boot for tilt cylinder / Additional counterweight	/ Dual driving tyre / Solid tyre / Japanese drum brake	/ DualfuelLPG system / Big capacity copper radiator / Upright exhaust system / Middle-positioned exhaust system / Dual air filter / Net cover of radiator / Sparkle arrester / Purified exhaust system / Swiwel LPG bottle support / Downward LPG bottle support	/ Auxiliary hydraulic valve / Electro-hydraulic proportional control system / Return oil filter	/ OBD / Front working light / Rear working light / Warning lamp / Speed meter / Over-speed alarm / LED working light	/ Duplex wide view free-lift mast / Triplex wide view 4-cylinder free-lift mast / Special forks / Wider fork carriage / Widerload back rest

Optional Attachments

/ Paper roll clamp	/ Sideshifter
/ Rotating bale clamp	/ Rotating forks
/ Load stabilizer	/ Fork extensioner
/ Multi-drum clamp	/ Load release device
/ Bale clamp	/ Carton clamp
/ Drum clamp	/ Push-pull device
/ Dumping clamp	/ Bucket
/ Crane arm	/ Hook
/ String Pole	/ Lengthened fork

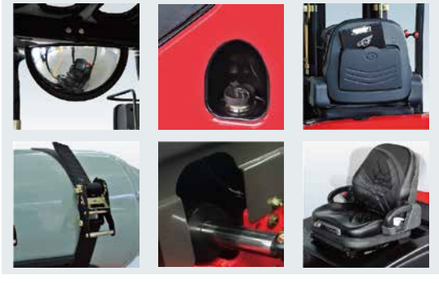

XF series 4.0-5.5t forklift specification:

Distinguishing mark	1.1	Manufacturer											
	1.2	Manufacturer's type designation		CPCD40-XW35B	CPCD45-XW35B	CPCD50-XXW35B	CPCD55-XXW35B	CPCD40-XW58B	CPCD45-XW58B	CPCD50-XXW58B	CPCD55-XXW58B	CPQYD40-XW57B CPYD40-XW57B	CPQYD45-XW57B CPYD45-XW57B	CPQYD50-XXW57B CPYD50-XXW57B	CPQYD55-XXW57B CPYD55-XXW57B
	1.3	Drive: electric (battery or mains), diesel, petrol, fuel gas		Diesel	Diesel	Diesel	Diesel	Diesel	Diesel	Diesel	Diesel	DUAL FUEL/LPG	DUAL FUEL/LPG	DUAL FUEL/LPG	DUAL FUEL/LPG
	1.4	Operated type (Hand, Pedestrian, Standing, Seating, Order-Picking)		Seated	Seated	Seated	Seated	Seated	Seated	Seated	Seated	Seated	Seated	Seated	Seated
	1.5	Rated capacity/rated load	Q (kg)	4000(3500)	4500(4000)	5000(4500)	5500(5000)	4000(3500)	4500(4000)	5000(4500)	5500(5000)	4000(3500)	4500(4000)	5000(4500)	5500(5000)
	1.6	Load centre distance	c (mm)	500(600)	500(600)	500(600)	500(600)	500(600)	500(600)	500(600)	500(600)	500(600)	500(600)	500(600)	500(600)
	1.8	Load distance, centre of drive axle to fork	x (mm)	550	550	555	585	550	550	555	585	550	550	555	585
		Rear overhang	mm	535	565	560	595	535	565	560	595	535	565	560	595
	1.9	Wheelbase	y (mm)	2000	2000	2150	2150	2000	2000	2150	2150	2000	2000	2150	2150
Weight	2.1	Service Weight	kg	6500	6700	6850	7250	6500	6700	6850	7250	6500	6700	6850	7250
	2.2	Axle loading, laden front/rear	kg	9120/1380	9825/1375	10325/1525	11000/1750	9120/1380	9825/1375	10325/1525	11000/1750	9120/1380	9825/1375	10325/1525	11000/1750
		Counter weight	kg	2125	2315	2450	2780	2125	2315	2450	2780	2125	2315	2450	2780
	2.3	Axle loading, unladen front/rear	kg	3020/3480	3020/3680	3020/3830	3300/3950	3020/3480	3020/3680	3020/3830	3300/3950	3020/3480	3020/3680	3020/3830	3300/3950
Tyres, chassis	3.1	Tyres: solid rubber, superelastic, pneumatic, polyurethane		pneumatic	pneumatic	pneumatic	pneumatic	pneumatic	pneumatic	pneumatic	pneumatic	pneumatic	pneumatic	pneumatic	pneumatic
	3.2	Tyre size, front		8.25-15-14PR	300-15-18PR	300-15-18PR	300-15-18PR	8.25-15-14PR	300-15-18PR	300-15-18PR	300-15-18PR	8.25-15-14PR	300-15-18PR	300-15-18PR	300-15-18PR
	3.3	Tyre size, rear		7.00-12-12PR	7.00-12-12PR	7.00-12-12PR	7.00-12-12PR	7.00-12-12PR	7.00-12-12PR	7.00-12-12PR	7.00-12-12PR	7.00-12-12PR	7.00-12-12PR	7.00-12-12PR	7.00-12-12PR
	3.6	Tread, front	b_{10} (mm)	1173	1203	1203	1203	1173	1203	1203	1203	1173	1203	1203	1203
	3.7	Tread, rear	b_{11} (mm)	1130	1130	1130	1130	1130	1130	1130	1130	1130	1130	1130	1130
Dimensions	4.1	Tilt of mast/fork carriage forward/backward	α/β(°)	6/12	6/12	6/12	6/12	6/12	6/12	6/12	6/12	6/12	6/12	6/12	6/12
	4.2	Height, mast lowered	h_1 (mm)	2245	2245	2245	2395	2245	2245	2245	2395	2245	2245	2245	2395
	4.3	Free lift	h_2 (mm)	160	160	160	160	160	160	160	160	160	160	160	160
	4.4	Lift	h_3 (mm)	3000	3000	3000	3000	3000	3000	3000	3000	3000	3000	3000	3000
	4.5	Height, mast extended	h_4 (mm)	4170	4170	4320	4320	4170	4170	4320	4320	4170	4170	4320	4320
	4.7	Height of overhead guard	h_6 (mm)	2270	2270	2270	2270	2270	2270	2270	2270	2270	2270	2270	2270
	4.8	Seat height/stand height	mm	1306	1306	1306	1306	1306	1306	1306	1306	1306	1306	1306	1306
	4.12	Coupling height	mm	450	450	450	450	450	450	450	450	450	450	450	450
	4.19	Overall length	mm	4155	4185	4335	4530	4155	4185	4335	4530	4155	4185	4335	4530
	4.20	Length to face of forks	l_2 (mm)	3085	3115	3265	3330	3085	3115	3265	3330	3085	3115	3265	3330
	4.21	Overall width	b_1(mm)	1420	1503	1503	1503	1420	1503	1503	1503	1420	1503	1503	1503
	4.22	Fork dimensions ISO 2331	s/e/l (mm)	1070x122x50	1070x150x50	1070x150x50	1200x150x60	1070x122x50	1070x150x50	1070x150x50	1200x150x60	1070x122x50	1070x150x50	1070x150x50	1200x150x60
	4.24	Fork carriage width		1250	1250	1250	1250	1250	1250	1250	1250	1250	1250	1250	1250
	4.25	Distance between fork-arms	b_5 (mm)	310~1200	310~1200	310~1200	310~1200	310~1200	310~1200	310~1200	310~1200	310~1200	310~1200	310~1200	310~1200
	4.31	Ground clearance, laden, below mast	m_1 (mm)	170	170	170	170	170	170	170	170	170	170	170	170
	4.32	Ground clearance, centre of wheelbase	m_2 (mm)	230	230	230	230	230	230	230	230	230	230	230	230
	4.34.1	Aisle width for pallets 1000 x 1200 crossways	mm	4440	4470	4630	4690	4440	4470	4630	4690	4440	4470	4630	4690
	4.34.2	Aisle width for pallets 800 x 1200 lengthways	mm	4440	4470	4630	4690	4440	4470	4630	4690	4440	4470	4630	4690
	4.35	Turning radius	Wa (mm)	2690	2720	2875	2905	2690	2720	2875	2905	2690	2720	2875	2905
	4.36	Internal turning radius	b_{13}(mm)	845	845	873	873	845	845	873	873	845	845	873	873
		Min. right angle stacking aisle width(Ast)	mm	3240	3270	3430	3490	3240	3270	3430	3490	3240	3270	3430	3490
Performance data	5.1	Travel speed, laden/unladen	km/h	-/24	-/24	-/24	-/24	-/24	-/24	-/24	-/24	-/24	-/24	-/24	-/24
	5.2	Lift speed, laden/unladen	m/s	0.460/-	0.460/-	0.400/-	0.400/-	0.460/-	0.460/-	0.400/-	0.400/-	0.460/-	0.460/-	0.400/-	0.400/-
	5.3	Lowering speed, laden/unladen	m/s	0.500/-	0.500/-	0.500/-	0.500/-	0.500/-	0.500/-	0.500/-	0.500/-	0.500/-	0.500/-	0.500/-	0.500/-
	5.5	Drawbar pull, laden/unladen	N	38000/-	38000/-	38000/-	38000/-	40000/-	40000/-	40000/-	40000/-	38000/-	38000/-	38000/-	38000/-
	5.7	Gradeability, laden/unladen*	%	33/-	31/-	29/-	27/-	35/-	33/-	31/-	28/-	33/-	31/-	29/-	27/-
Combustion-engine	7.1	Engine manufacturer/type		PERKINS 1104D-44	PERKINS 1104D-44	PERKINS 1104D-44	PERKINS 1104D-44	QSF2.8T4F	QSF2.8T4F	QSF2.8T4F	QSF2.8T4F	PSI-4.3L	PSI-4.3L	PSI-4.3L	PSI-4.3L
		Emission STD		EURO IIIA	EURO IIIA	EURO IIIA	EURO IIIA	EURO IIIB	EURO IIIB	EURO IIIB	EURO IIIB				
	7.2	Engine power according to DIN ISO 1585	kw	55.9	55.9	55.9	55.9	55	55	55	55	LP:77, G:76	LP:77, G:76	LP:77 G:76	LP:77 G:76
	7.3	Rated speed	min	2200	2200	2200	2200	2200	2200	2200	2200	2300	2300	2300	2300
	7.4	Number of cylinders/displacement	(-) / (cm^3)	4/4410	4/4410	4/4410	4/4410	4/2800	4/2800	4/2800	4/2800	6/4294	6/4294	6/4294	6/4294
	7.10	Battery voltage/nominal capacity	V/Ah	24/90	24/90	24/90	24/90	12/105	12/105	12/105	12/105	12/60	12/60	12/60	12/60
		Rated torque	N•m/r/min	265/1700	265/1700	265/1700	265/1700	298/1600	298/1600	298/1600	298/1600	LP:332.85/1400, G:318/2300	LP:332.85/1400, G:318/2300	LP:332.85/1400, G:318/2300	LP:332.85/1400, G:318/2300
		Transmissions Manufacturer		OKAMURA	OKAMURA	OKAMURA	OKAMURA	OKAMURA	OKAMURA	OKAMURA	OKAMURA	OKAMURA	OKAMURA	OKAMURA	OKAMURA
		Stage FWD/RVS		2/1	2/1	2/1	2/1	2/1	2/1	2/1	2/1	2/1	2/1	2/1	2/1
		Bore × stroke	mm×mm	105x127	105x127	105x127	105x127	94x100	94x100	94x100	94x100	101.6x88.4	101.6x88.4	101.6x88.4	101.6x88.4
		Transmissions Type		Powershift	Powershift	Powershift	Powershift	Powershift	Powershift	Powershift	Powershift	Powershift	Powershift	Powershift	Powershift
Addition data	10.1	Operating pressure for attachments	bar	190	190	190	190	190	190	190	190	190	190	190	190
	10.4	Fuel tank capacity	liter	80	80	90	90	80	80	90	90	80	80	90	90

Note: *With suspension seat or cabin

* As a calculated value

XF series 4.0-5.5t forklift specification:

Distinguishing mark	1.1	Manufacturer																
	1.2	Manufacturer's type designation		CPCD40-XW19B	CPCD45-XW19B	CPCD50-XXW19B	CPCD55-XXW19B	CPCD40-XW76B	CPCD45-XW76B	CPCD50-XXW76B	CPCD55-XXW76B	CPYD40-XW68B	CPYD45-XW68B	CPYD50-XXW68B	CPYD55-XXW68B	CPCD40-XG81B	CPCD45-XG81B	CPCD50-XXG81B	CPCD55-XXG81B
	1.3	Drive: electric (battery or mains), diesel, petrol, fuel gas		Diesel	Diesel	Diesel	Diesel	Diesel	Diesel	Diesel	Diesel	LPG	LPG	LPG	LPG	Diesel	Diesel	Diesel	Diesel
	1.4	Operated type (Hand, Pedestrian, Standing, Seating, Order-Picking)		Seated	Seated	Seated	Seated	Seated	Seated	Seated	Seated	Seated	Seated	Seated	Seated	Seated	Seated	Seated	Seated
	1.5	Rated capacity/rated load	Q (kg)	4000(3500)	4500(4000)	5000(4500)	5500(5000)	4000(3500)	4500(4000)	5000(4500)	5500(5000)	4000(3500)	4500(4000)	5000(4500)	5500(5000)	4000(3500)	4500(4000)	5000(4500)	5500(5000)
	1.6	Load centre distance	c (mm)	500(600)	500(600)	500(600)	500(600)	500(600)	500(600)	500(600)	500(600)	500(600)	500(600)	500(600)	500(600)	500(600)	500(600)	500(600)	500(600)
	1.8	Load distance, centre of drive axle to fork	x (mm)	550	550	555	585	550	550	555	585	550	550	555	585	550	550	555	585
		Rear overhang	mm	535	565	560	595	535	565	560	595	535	565	560	595	535	565	560	595
	1.9	Wheelbase	y (mm)	2000	2000	2150	2150	2000	2000	2150	2150	2000	2000	2150	2150	2000	2000	2150	2150
Weight	2.1	Service Weight	kg	6500	6700	6850	7250	6500	6700	6850	7250	6500	6700	6850	7250	6500	6700	6850	7250
	2.2	Axle loading, laden front/rear	kg	9120/1380	9825/1375	10325/1525	11000/1750	9120/1380	9825/1375	10325/1525	11000/1750	9120/1380	9825/1375	10325/1525	11000/1750	9120/1380	9825/1375	10325/1525	11000/1750
		Counter weight	kg	2125	2315	2450	2780	2125	2315	2450	2780	2125	2315	2450	2780	2125	2315	2450	2780
	2.3	Axle loading, unladen front/rear	kg	3020/3480	3020/3680	3020/3830	3300/3950	3020/3480	3020/3680	3020/3830	3300/3950	3020/3480	3020/3680	3020/3830	3300/3950	3020/3480	3020/3680	3020/3830	3300/3950
Tyres, chassis	3.1	Tyres: solid rubber, superelastic, pneumatic, polyurethane		pneumatic	pneumatic	pneumatic	pneumatic	pneumatic	pneumatic	pneumatic	pneumatic	pneumatic	pneumatic	pneumatic	pneumatic	pneumatic	pneumatic	pneumatic	pneumatic
	3.2	Tyre size, front		8.25-15-14PR	300-15-18PR	300-15-18PR	300-15-18PR	8.25-15-14PR	300-15-18PR	300-15-18PR	300-15-18PR	8.25-15-14PR	300-15-18PR	300-15-18PR	300-15-18PR	8.25-15-14PR	300-15-18PR	300-15-18PR	300-15-18PR
	3.3	Tyre size, rear		7.00-12-12PR	7.00-12-12PR	7.00-12-12PR	7.00-12-12PR	7.00-12-12PR	7.00-12-12PR	7.00-12-12PR	7.00-12-12PR	7.00-12-12PR	7.00-12-12PR	7.00-12-12PR	7.00-12-12PR	7.00-12-12PR	7.00-12-12PR	7.00-12-12PR	7.00-12-12PR
	3.6	Tread, front	b_{10} (mm)	1173	1203	1203	1203	1173	1203	1203	1203	1173	1203	1203	1203	1173	1203	1203	1203
	3.7	Tread, rear	b_{11} (mm)	1130	1130	1130	1130	1130	1130	1130	1130	1130	1130	1130	1130	1130	1130	1130	1130
Dimensions	4.1	Tilt of mast/fork carriage forward/backward	α/β(°)	6/12	6/12	6/12	6/12	6/12	6/12	6/12	6/12	6/12	6/12	6/12	6/12	6/12	6/12	6/12	6/12
	4.2	Height, mast lowered	h_1 (mm)	2245	2245	2245	2395	2245	2245	2245	2395	2245	2245	2245	2395	2245	2245	2245	2395
	4.3	Free lift	h_2 (mm)	160	160	160	160	160	160	160	160	160	160	160	160	160	160	160	160
	4.4	Lift	h_3 (mm)	3000	3000	3000	3000	3000	3000	3000	3000	3000	3000	3000	3000	3000	3000	3000	3000
	4.5	Height, mast extended	h_4 (mm)	4170	4170	4320	4320	4170	4170	4320	4320	4170	4170	4320	4320	4170	4170	4320	4320
	4.7	Height of overhead guard	h_6 (mm)	2270	2270	2270	2270	2270	2270	2270	2270	2270	2270	2270	2270	2270	2270	2270	2270
	4.8	Seat height/stand height	mm	1306	1306	1306	1306	1306	1306	1306	1306	1306	1306	1306	1306	1306	1306	1306	1306
	4.12	Coupling height	mm	450	450	450	450	450	450	450	450	450	450	450	450	450	450	450	450
	4.19	Overall length	mm	4155	4185	4335	4530	4155	4185	4335	4530	4155	4185	4335	4530	4155	4185	4335	4530
	4.20	Length to face of forks	l_2 (mm)	3085	3115	3265	3330	3085	3115	3265	3330	3085	3115	3265	3330	3085	3115	3265	3330
	4.21	Overall width	b_1(mm)	1420	1503	1503	1503	1420	1503	1503	1503	1420	1503	1503	1503	1420	1503	1503	1503
	4.22	Fork dimensions ISO 2331	s/e/l (mm)	1070x122x50	1070x150x50	1070x150x50	1200x150x60	1070x122x50	1070x150x50	1070x150x50	1200x150x60	1070x122x50	1070x150x50	1070x150x50	1200x150x60	1070x122x50	1070x150x50	1070x150x50	1200x150x60
	4.24	Fork carriage width		1250	1250	1250	1250	1250	1250	1250	1250	1250	1250	1250	1250	1250	1250	1250	1250
	4.25	Distance between fork-arms	b_5 (mm)	310~1200	310~1200	310~1200	310~1200	310~1200	310~1200	310~1200	310~1200	310~1200	310~1200	310~1200	310~1200	310~1200	310~1200	310~1200	310~1200
	4.31	Ground clearance, laden, below mast	m_1 (mm)	170	170	170	170	170	170	170	170	170	170	170	170	170	170	170	170
	4.32	Ground clearance, centre of wheelbase	m_2 (mm)	230	230	230	230	230	230	230	230	230	230	230	230	230	230	230	230
	4.34.1	Aisle width for pallets 1000 x 1200 crossways	mm	4440	4470	4630	4690	4440	4470	4630	4690	4440	4470	4630	4690	4440	4470	4630	4690
	4.34.2	Aisle width for pallets 800 x 1200 lengthways	mm	4440	4470	4630	4690	4640	4670	4830	4890	4640	4670	4830	4890	4640	4670	4830	4890
	4.35	Turning radius	Wa (mm)	2690	2720	2875	2905	2690	2720	2875	2905	2690	2720	2875	2905	2690	2720	2875	2905
	4.36	Internal turning radius	b_{13}(mm)	845	845	873	873	845	845	873	873	845	845	873	873	845	845	873	873
		Min. right angle stacking aisle width(Ast)	mm	3240	3270	3430	3490	3240	3270	3430	3490	3240	3270	3430	3490	3240	3270	3430	3490
Performance data	5.1	Travel speed, laden/unladen	km/h	-/26	-/26	-/26	-/26	-/26	-/26	-/26	-/26	-/24	-/24	-/24	-/24	-/25	-/25	-/25	-/25
	5.2	Lift speed, laden/unladen	m/s	0.460/-	0.460/-	0.400/-	0.400/-	0.460/-	0.460/-	0.400/-	0.400/-	0.460/-	0.460/-	0.400/-	0.400/-	0.460/-	0.460/-	0.400/-	0.400/-
	5.3	Lowering speed, laden/unladen	m/s	0.500/-	0.500/-	0.500/-	0.500/-	0.500/-	0.500/-	0.500/-	0.500/-	0.500/-	0.500/-	0.500/-	0.500/-	0.500/-	0.500/-	0.500/-	0.500/-
	5.5	Drawbar pull, laden/unladen	N	38000/-	38000/-	38000/-	38000/-	38000/-	38000/-	38000/-	38000/-	38000/-	38000/-	38000/-	38000/-	38600/-	38600/-	38600/-	38600/-
	5.7	Gradeability, laden/unladen*	%	33/-	31/-	29/-	27/-	33/-	31/-	29/-	27/-	33/-	31/-	29/-	27/-	30/-	28/-	26/-	26/-
Combustion-engine	7.1	Engine manufacturer/type		TD42AA	TD42AA	TD42AA	TD42AA	MITSUBISHI/S6S	MITSUBISHI/S6S	MITSUBISHI/S6S	MITSUBISHI/S6S	PSI-4.3L	PSI-4.3L	PSI-4.3L	PSI-4.3L	XINCHAI 4E30YG30	XINCHAI 4E30YG30	XINCHAI 4E30YG30	XINCHAI 4E30YG30
		Emission STD						EURO IIIA/ GB3	EURO IIIA/ GB3	EURO IIIA/ GB3	EURO IIIA/ GB3					GB3	GB3	GB3	GB3
	7.2	Engine power according to DIN ISO 1585	kw	59	59	59	59	52	52	52	52	77	77	77	77	55.2	55.2	55.2	55.2
	7.3	Rated speed	min	2300	2300	2300	2300	2300	2300	2300	2300	2300	2300	2300	2300	2200	2200	2200	2200
	7.4	Number of cylinders/displacement	(-) / (cm^3)	6/4169	6/4169	6/4169	6/4169	6/4966	6/4966	6/4966	6/4966	6/4294	6/4294	6/4294	6/4294	4/2.970	4/2.970	4/2.970	4/2.970
	7.10	Battery voltage/nominal capacity	V/Ah	24/60	24/60	24/60	24/60	24/60	24/60	24/60	24/60	12/60	12/60	12/60	12/60	12/105	12/105	12/105	12/105
		Rated torque	N•m/r/min	254/1800	254/1800	254/1800	254/1800	248/1700	248/1700	248/1700	248/1700	332.85/1400	332.85/1400	332.85/1400	332.85/1400	310/1200~1600	310/1200~1600	310/1200~1600	310/1200~1600
		Transmissions Manufacturer		OKAMURA	OKAMURA	OKAMURA	OKAMURA	OKAMURA	OKAMURA	OKAMURA	OKAMURA	OKAMURA	OKAMURA	OKAMURA	OKAMURA	OKAMURA	OKAMURA	OKAMURA	OKAMURA
		Stage FWD/RVS		2/1	2/1	2/1	2/1	2/1	2/1	2/1	2/1	2/1	2/1	2/1	2/1	2/1	2/1	2/1	2/1
		Bore × stroke	mm×mm	96x96	96x96	96x96	96x96	94x120	94x120	94x120	94x120	101.6x88.4	101.6x88.4	101.6x88.4	101.6x88.4	94×107	94×107	94×107	94×107
		Transmissions Type		Powershift	Powershift	Powershift	Powershift	Powershift	Powershift	Powershift	Powershift	Powershift	Powershift	Powershift	Powershift	Powershift	Powershift	Powershift	Powershift
Addition data	10.1	Operating pressure for attachments	bar	190	190	190	190	190	190	190	190	190	190	190	190	190	190	190	190
	10.4	Fuel tank capacity	liter	80	80	90	90	80	80	90	90	80	80	90	90	80	80	90	90

Note: *With suspension seat or cabin

* As a calculated value

XF series 4.0-5.5t forklift specification:

Distinguishing mark	1.1	Manufacturer									
	1.2	Manufacturer's type designation		CPCD40-XW99BN	CPCD45-XW99BN	CPCD50-XXW99BN	CPCD55-XXW99BN	CPCD40-XH8BN	CPCD45-XH8BN	CPCD50-XXH8BN	CPCD55-XXH8BN
	1.3	Drive: electric (battery or mains), diesel, petrol, fuel gas		Diesel	Diesel	Diesel	Diesel	Diesel	Diesel	Diesel	Diesel
	1.4	Operated type (Hand, Pedestrian, Standing, Seating, Order-Picking)		Seated	Seated	Seated	Seated	Seated	Seated	Seated	Seated
	1.5	Rated capacity/rated load	Q (kg)	4000(3500)	4500(4000)	5000(4500)	5500(5000)	4000(3500)	4500(4000)	5000(4500)	5500(5000)
	1.6	Load centre distance	c (mm)	500(600)	500(600)	500(600)	500(600)	500(600)	500(600)	500(600)	500(600)
	1.8	Load distance, centre of drive axle to fork	x (mm)	550	550	555	585	550	550	555	585
		Rear overhang	mm	535	565	560	595	535	565	560	595
	1.9	Wheelbase	y (mm)	2000	2000	2150	2150	2000	2000	2150	2150
Weight	2.1	Service Weight	kg	6500	6700	6850	7250	6500	6700	6850	7250
	2.2	Axle loading, laden front/rear	kg	9120/1380	9825/1375	10325/1525	11000/1750	9120/1380	9825/1375	10325/1525	11000/1750
		Counter weight	kg	2125	2315	2450	2780	2125	2315	2450	2780
	2.3	Axle loading, unladen front/rear	kg	3020/3480	3020/3680	3020/3830	3300/3950	3020/3480	3020/3680	3020/3830	3300/3950
Tyres, chassis	3.1	Tyres: solid rubber, superelastic, pneumatic, polyurethane		pneumatic	pneumatic	pneumatic	pneumatic	pneumatic	pneumatic	pneumatic	pneumatic
	3.2	Tyre size, front		8.25-15-14PR	300-15-18PR	300-15-18PR	300-15-18PR	8.25-15-14PR	300-15-18PR	300-15-18PR	300-15-18PR
	3.3	Tyre size, rear		7.00-12-12PR	7.00-12-12PR	7.00-12-12PR	7.00-12-12PR	7.00-12-12PR	7.00-12-12PR	7.00-12-12PR	7.00-12-12PR
	3.6	Tread, front	b_{11} (mm)	1173	1203	1203	1203	1173	1203	1203	1203
	3.7	Tread, rear	b_{11} (mm)	1130	1130	1130	1130	1130	1130	1130	1130
Dimensions	4.1	Tilt of mast/fork carriage forward/backward	α/β(°)	6/12	6/12	6/12	6/12	6/12	6/12	6/12	6/12
	4.2	Height, mast lowered	h_1 (mm)	2245	2245	2245	2395	2245	2245	2245	2395
	4.3	Free lift	h_2 (mm)	160	160	160	160	160	160	160	160
	4.4	Lift	h_3 (mm)	3000	3000	3000	3000	3000	3000	3000	3000
	4.5	Height, mast extended	h_4 (mm)	4170	4170	4320	4320	4170	4170	4320	4320
	4.7	Height of overhead guard	h_6 (mm)	2270	2270	2270	2270	2270	2270	2270	2270
	4.8	Seat height/stand height	mm	1306	1306	1306	1306	1306	1306	1306	1306
	4.12	Coupling height	mm	450	450	450	450	450	450	450	450
	4.19	Overall length	mm	4155	4185	4335	4530	4155	4185	4335	4530
	4.20	Length to face of forks	l_2 (mm)	3085	3115	3265	3330	3085	3115	3265	3330
	4.21	Overall width	b_1(mm)	1420	1503	1503	1503	1420	1503	1503	1503
	4.22	Fork dimensions ISO 2331	s/e/l (mm)	1070x122x50	1070x150x50	1070x150x50	1200x150x60	1070x122x50	1070x150x50	1070x150x50	1200x150x60
	4.24	Fork carriage width		1250	1250	1250	1250	1250	1250	1250	1250
	4.25	Distance between fork-arms	b_5 (mm)	310~1200	310~1200	310~1200	310~1200	310~1200	310~1200	310~1200	310~1200
	4.31	Ground clearance, laden, below mast	m_1 (mm)	170	170	170	170	170	170	170	170
	4.32	Ground clearance, centre of wheelbase	m_2 (mm)	230	230	230	230	230	230	230	230
	4.34.1	Aisle width for pallets 1000 x 1200 crossways	mm	4440	4470	4630	4690	4440	4470	4630	4690
	4.34.2	Aisle width for pallets 800 x 1200 lengthways	mm	4640	4670	4830	4890	4640	4670	4830	4890
	4.35	Turning radius	W_a (mm)	2690	2720	2875	2905	2690	2720	2875	2905
	4.36	Internal turning radius	b_{13}(mm)	845	845	873	873	845	845	873	873
		Min. right angle stacking aisle width(Ast)	mm	3240	3270	3430	3490	3240	3270	3430	3490
Performance data	5.1	Travel speed, laden/unladen	km/h	-/24	-/24	-/24	-/24	-/25	-/25	-/25	-/25
	5.2	Lift speed, laden/unladen	m/s	0.500/-	0.500/-	0.430/-	0.430/-	0.500/-	0.500/-	0.430/-	0.430/-
	5.3	Lowering speed, laden/unladen	m/s	0.500/-	0.500/-	0.500/-	0.500/-	0.500/-	0.500/-	0.500/-	0.500/-
	5.5	Drawbar pull, laden/unladen	N	38500/-	38500/-	38500/-	38500/-	38600/-	38600/-	38600/-	38600/-
	5.7	Gradeability, laden/unladen*	%	28/-	25/-	23/-	23/-	30/-	28/-	26/-	26/-
Combustion-engine	7.1	Engine manufacturer/type		KUBOTA V3307-CR-TIE5B	KUBOTA V3307-CR-TIE5B	KUBOTA V3307-CR-TIE5B	KUBOTA V3307-CR-TIE5B	XINCHAI 4E30YG52	XINCHAI 4E30YG52	XINCHAI 4E30YG52	XINCHAI 4E30YG52
		Emission STD		EU StageV EPA/CARB Tier4 F	EU StageV EPA/CARB Tier4 F	EU StageV EPA/CARB Tier4 F	EU StageV EPA/CARB Tier4 F	EU StageV	EU StageV	EU StageV	EU StageV
	7.2	Engine power according to DIN ISO 1585	kw	54.6	54.6	54.6	54.6	55.8	55.8	55.8	55.8
	7.3	Rated speed	min	2200	2200	2200	2200	2200	2200	2200	2200
	7.4	Number of cylinders/displacement	(-) / (cm^3)	4/3.331	4/3.331	4/3.331	4/3.331	4/2.970	4/2.970	4/2.970	4/2.970
	7.10	Battery voltage/nominal capacity	V/Ah	12/105	12/105	12/105	12/105	12/105	12/105	12/105	12/105
		Rated torque	N·m/r/min	330/1400	330/1400	330/1400	330/1400	320/1200~1600	320/1200~1600	320/1200~1600	320/1200~1600
		Transmissions Manufacturer		OKAMURA	OKAMURA	OKAMURA	OKAMURA	OKAMURA	OKAMURA	OKAMURA	OKAMURA
		Stage FWD/RVS		1/1	1/1	1/1	1/1	1/1	1/1	1/1	1/1
		Bore × stroke	mm×mm	94×120	94×120	94×120	94×120	94×107	94×107	94×107	94×107
		Transmissions Type		Powershift	Powershift	Powershift	Powershift	Powershift	Powershift	Powershift	Powershift
Addition data	10.1	Operating pressure for attachments	bar	190	190	190	190	190	190	190	190
	10.4	Fuel tank capacity	liter	80	80	90	90	80	80	90	90

Note: *with suspension seat or cabin
* As a calculated value

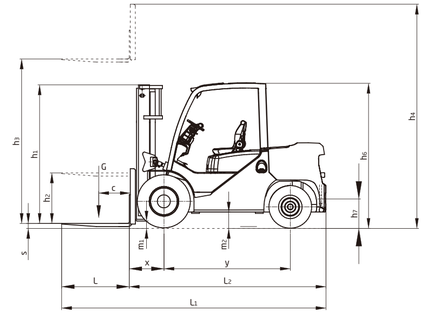

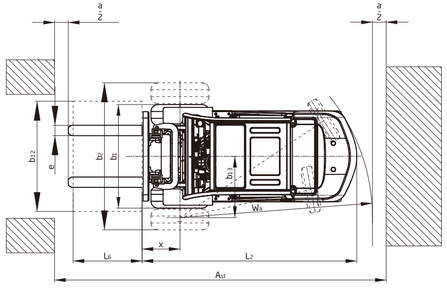

$A_{st} = W_a + x + L_6 + a;\ a = 200$

applies only if $\frac{b_{12}}{2} \leq b_{13}$

