CESAB P200 1.4 - 2.5 tonne

Powered pallet trucks



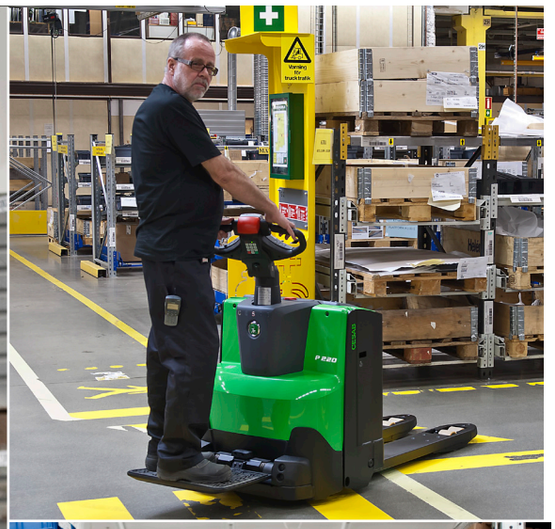



Truck Specifications

CESAB

CESAB P214- P216 Truck Specifications

IDENTIFICATION					
1.1	Manufacturer			CESAB	CESAB
1.2	Model			P214	P216
1.3	Drive			Electric	Electric
1.4	Operator type			Pedestrian	Pedestrian
1.5	Load capacity/rated load	Q	[kg]	1400	1600
1.6	Load centre	c	[mm]	600	600
1.8	Load distance, centre of support arm wheel to face of forks	x	[mm]	928	928
1.9	Wheelbase	y	[mm]	1260	1317
WEIGHT					
2.1	Service weight including battery		[kg]	458	524
2.2	Axle load, with load, drive/castor/fork wheel		[kg]	590/150/1115	695/150/1275
2.3	Axle load, without load, drive/castor/fork wheel		[kg]	200/150/105	255/150/115
WHEELS					
3.1	Drive/castor/fork wheel			Topthane/Topthane/PUR *)	Topthane/Topthane/PUR *)
3.2	Wheel size, front		[mm]	Ø230x70	Ø230x70
3.3	Wheel size, rear		[mm]	Ø85x100	Ø85x100
3.4	Additional wheels (dimensions)		[mm]	Ø125x50	Ø125x50
3.5	Wheels, number front/rear (x=driven wheels)			1x+2/2	1x+2/2
3.6	Track width, front	b_{10}	[mm]	430	430
3.7	Track width, rear	b_{11}	[mm]	394	394
DIMENSIONS					
4.4	Lift	h_3	[mm]	120	120
	Lift height	h_{23}	[mm]	205	205
4.9	Height of tiller in drive position, min./max.	h_{14}	[mm]	865/1235	865/1235
4.15	Height, fork lowered	h_{13}	[mm]	85	85
4.19	Overall length	l_1	[mm]	1631	1688
4.20	Length to face of forks	l_2	[mm]	481	538
4.21	Overall width	b_1	[mm]	726	726
4.22	Fork dimensions	s/e/l	[mm]	76/156/1150 *)	76/156/1150 *)
4.25	Width over forks	b_5	[mm]	550 *)	550 *)
4.32	Ground clearance, centre of wheelbase	m_2	[mm]	21	21
4.33	Aisle width for pallets 1000x1200 crossways	A_{st}	[mm]	1842	1899
4.34	Aisle width for pallets 800x1200 lengthways	A_{st}	[mm]	1892	1949
4.35	Turning radius	W_a	[mm]	1420	1477
PERFORMANCE DATA					
5.1	Travel speed, with/without load		[km/h]	6/6	6/6
5.2	Lift speed, with/without load		[m/s]	0.04/0.05	0.04/0.05
5.3	Lowering speed, with/without load		[m/s]	0.09/0.08	0.09/0.08
5.8	Max. gradeability, with/without load		[%]	8/18 1)	8/18 1)
5.10	Service brake			Electromagnetic	Electromagnetic
ELECTRIC MOTOR					
6.1	Drive motor rating S2 60 min		[kW]	1.0	1.0
6.2	Lift motor rating at S3 15%		[kW]	1.0 2)	1.0 2)
6.4	Battery voltage/nominal capacity K_5		[V/Ah]	24/150 *)	24/225 *)
6.5	Battery weight		[kg]	158	214
6.6	Energy consumption according to VDI cycle		[kWh/h]	0.28	0.30
OTHERS					
8.1	Type of drive control			CESAB Drive Control	CESAB Drive Control

All data are based on table configuration. Other configurations may give other values.
Truck performance and dimensions are nominal and subject to tolerances.
Specifications are subject to change without notice.

1) Measured according to company standard
2) S3 10%
*) Further alternatives are available and will produce other values.

CESAB P218 - P225 Truck Specifications

IDENTIFICATION						
1.1	Manufacturer			CESAB	CESAB	CESAB
1.2	Model			P218	P220	P225
1.3	Drive			Electric	Electric	Electric
1.4	Operator type			Pedestrian	Pedestrian	Pedestrian
1.5	Load capacity/rated load	Q	[kg]	1800	2000	2500
1.6	Load centre	c	[mm]	600	600	600
1.8	Load distance, centre of support arm wheel to face of forks	x	[mm]	898	898	898
1.9	Wheelbase	y	[mm]	1287	1287	1287
WEIGHT						
2.1	Service weight including battery		[kg]	554	554	564
2.2	Axle load, with load, drive/castor/fork wheel		[kg]	760/150/1435	815/150/1580	950/150/1945
2.3	Axle load, without load, drive/castor/fork wheel		[kg]	260/150/135	260/150/135	260/150/135
WHEELS						
3.1	Drive/castor/fork wheel			Topthane/Topthane/PUR *)	Topthane/Topthane/PUR *)	Vulkollan/Topthane/Vulkollan *)
3.2	Wheel size, front		[mm]	Ø230x70	Ø230x70	Ø230x70
3.3	Wheel size, rear		[mm]	Ø85x75	Ø85x75	Ø85x75
3.4	Additional wheels (dimensions)		[mm]	Ø125x50	Ø125x50	Ø125x50
3.5	Wheels, number front/rear (x=driven wheels)			1x+2/4	1x+2/4	1x+2/4
3.6	Track width, front	b_{10}	[mm]	430	430	430
3.7	Track width, rear	b_{11}	[mm]	370	370	370
DIMENSIONS						
4.4	Lift	h_3	[mm]	120	120	120
	Lift height	h_{23}	[mm]	205	205	205
4.8	Stand height (optional platform)	h_7	[mm]	—	150	—
4.9	Height of tiller in drive position, min./max.	h_{14}	[mm]	865/1235	865/1235	865/1235
4.15	Height, fork lowered	h_{13}	[mm]	85	85	85
4.19	Overall length	l_1	[mm]	1688	1688	1688
4.20	Length to face of forks	l_2	[mm]	538	538	538
4.21	Overall width	b_1	[mm]	726	726	726
4.22	Fork dimensions	s/e/l	[mm]	78/180/1150 *)	78/180/1150 *)	78/180/1150 *)
4.25	Width over forks	b_5	[mm]	550 *)	550 *)	550 *)
4.32	Ground clearance, centre of wheelbase	m_2	[mm]	21	21	21
4.33	Aisle width for pallets 1000x1200 crossways	A_{st}	[mm]	1899	1899	1899
4.34	Aisle width for pallets 800x1200 lengthways	A_{st}	[mm]	1949	1949	1949
4.35	Turning radius	W_a	[mm]	1447	1447	1447
PERFORMANCE DATA						
5.1	Travel speed, with/without load		[km/h]	6/6	6/6	6/6
5.2	Lift speed, with/without load		[m/s]	0.04/0.05	0.06/0.09	0.05/0.09
5.3	Lowering speed, with/without load		[m/s]	0.09/0.08	0.09/0.08	0.09/0.08
5.8	Max. gradeability, with/without load		[%]	9/18 1)	9/18 1)	8/18 1)
5.10	Service brake			Electromagnetic	Electromagnetic	Electromagnetic
ELECTRIC MOTOR						
6.1	Drive motor rating S2 60 min		[kW]	1.0	1.5	1.5
6.2	Lift motor rating at S3 15%		[kW]	1.0 2)	1.4 2)	1.4 2)
6.4	Battery voltage/nominal capacity K_5		[V/Ah]	24/225 *)	24/225 *)	24/225 *)
6.5	Battery weight		[kg]	214	214	214
6.6	Energy consumption according to VDI cycle		[kWh/h]		0.35	
OTHERS						
8.1	Type of drive control			CESAB Drive Control	CESAB Drive Control	CESAB Drive Control

All data are based on table configuration. Other configurations may give other values.
Truck performance and dimensions are nominal and subject to tolerances.
Specifications are subject to change without notice.

1) Measured according to company standard
2) S3 10%
*) Further alternatives are available and will produce other values.

CESAB P214 - P216 Dimensional Drawings

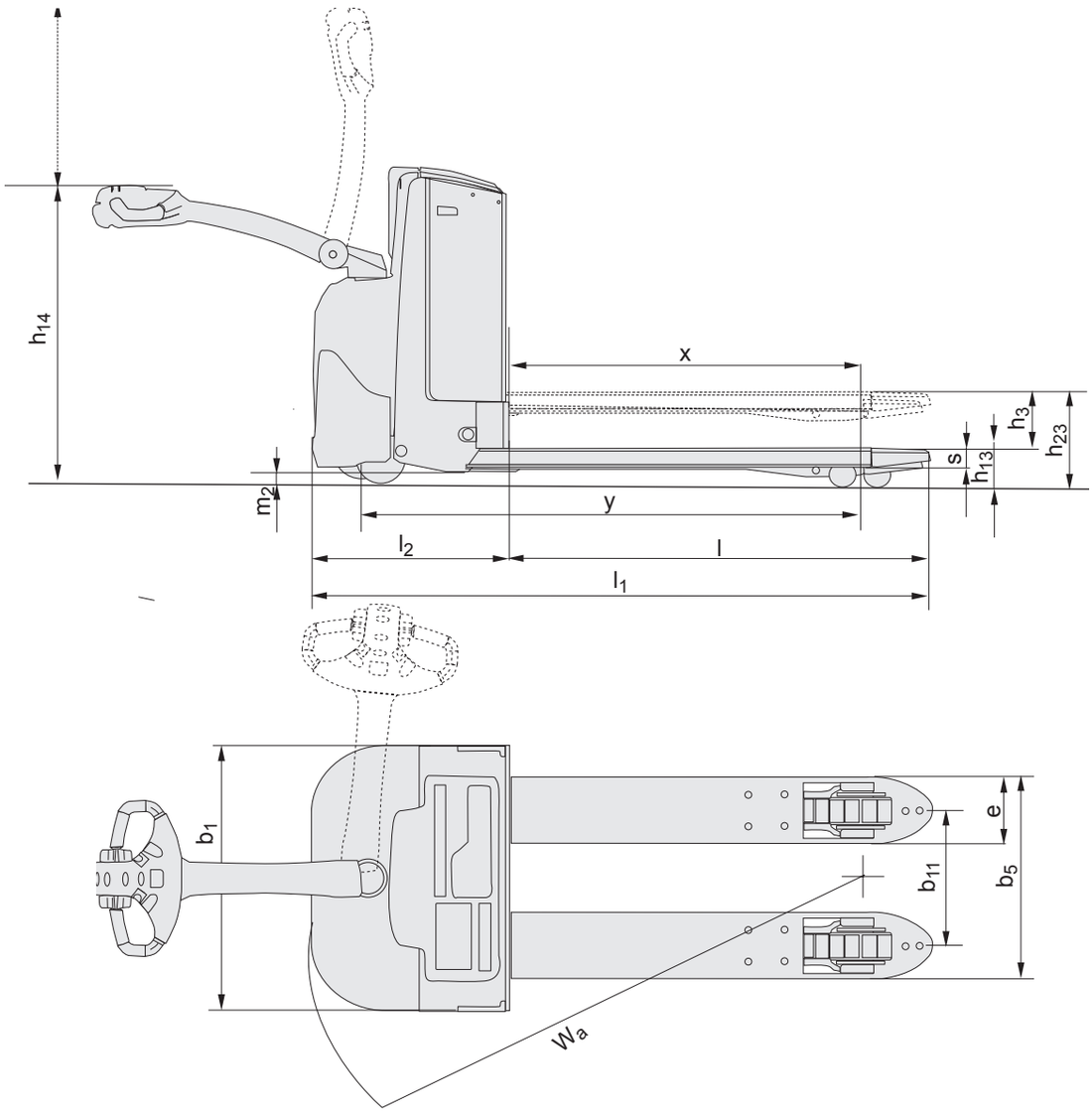

The data in this specification sheet was determined based on our standard testing conditions. Operating performance may vary depending on the actual specification and condition of the truck as well as the condition of the operating area. Availability and specifications are determined regionally and are subject to change without notice. Please consult your authorised CESAB dealership for further details. SPEC_P200_EN_2019 / P&B P200 V13 – Copyright CESAB Material Handling Europe.

Battery compartments

					P214	P216	
Battery change						Lift out	
Battery compartment					Small	Small	Medium
1.9	Wheelbase		y	mm	1260	1260	1317
4.19	Overall length	without platform	l_1	mm	1631	1631	1688
		platform up/down	l_1	mm	-	-	-
4.20	Length to face of forks	without platform	l_2	mm	481	481	538
		platform up/down	l_2	mm	-	-	-
4.33	Aisle width for pallets 1000x1200 crossways	without platform	A_{st}	mm	1842	1842	1899
		platform up/down	A_{st}	mm	-	-	-
4.34	Aisle width for pallets 800x1200 lengthways	without platform	A_{st}	mm	1892	1892	1949
		platform up/down	A_{st}	mm	-	-	-
4.35	Turning radius	without platform	W_a	mm	1420	1420	1477
		platform up/down	W_a	mm	-	-	-
6.4	Battery voltage, nominal capacity K_5			V/Ah	24/150	24/150	24/225
6.5	Battery weight, min.-max.			kg	120-165	120—165	180—220

CESAB P218 - P225 Dimensional Drawings

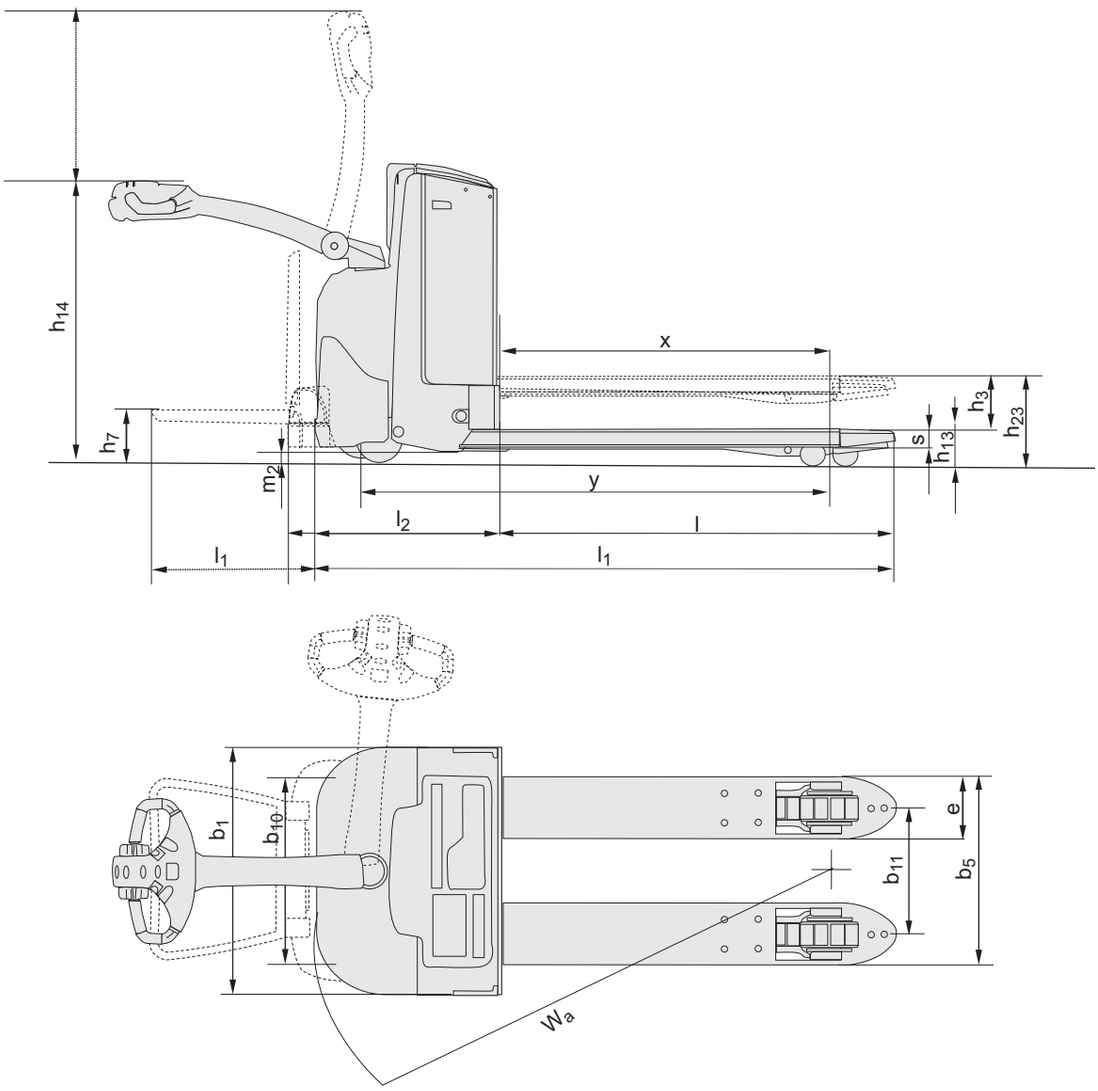

The data in this specification sheet was determined based on our standard testing conditions. Operating performance may vary depending on the actual specification and condition of the truck as well as the condition of the operating area. Availability and specifications are determined regionally and are subject to change without notice. Please consult your authorised CESAB dealership for further details. SPEC_P200_EN_2019 / P&B P200 V13 – Copyright CESAB Material Handling Europe.

Battery compartments

					P218			P220				P225		
Battery change						Lift out			Lift out			Sideways	Lift out		Sideways
Battery compartment					Medium	Large	DIN	Medium	Large	DIN	Large	Medium	Large	Large
1.9	Wheelbase		y	mm	1287	1337	1297	1287	1337	1297	1337	1287	1337	1337
4.19	Overall length	without platform	l_1	mm	1688	1738	1698	1688	1738	1698	1738	1688	1738	1738
		platform up/down	l_1	mm	-	-	-	1773/2163	1823/2213	-	1823/2213	-	-	-
4.20	Length to face of forks	without platform	l_2	mm	538	588	548	538	588	549	588	538	588	588
		platform up/down	l_2	mm	-	-	-	623/1013	673/1063	-	673/1063	-	-	-
4.33	Aisle width for pallets 1000x1200 crossways	without platform	A_{st}	mm	1899	1948	1768	1899	1948	1768	1948	1899	1948	1948
		platform up/down	A_{st}	mm	-	-	-	1984/2384	2033/2433	-	2033/2433	-	-	-
4.34	Aisle width for pallets 800x1200 lengthways	without platform	A_{st}	mm	1949	1998	1968	1949	1998	1968	1998	1949	1998	1998
		platform up/down	A_{st}	mm	-	-	-	2034/2434	2083/2483	-	2083/2483	-	-	-
4.35	Turning radius	without platform	W_a	mm	1447	1496	1466	1447	1496	1466	1496	1447	1496	1496
		platform up/down	W_a	mm	-	-	-	1532/1932	1581/1981	-	1581/1981	-	-	-
6.4	Battery voltage, nominal capacity K_5			V/Ah	24/225	24/300	24/250	24/225	24/300	24/250	24/260	24/225	24/300	24/260
6.5	Battery weight, min.-max.			kg	180-220	220-270	180 - 222	180-220	220-270	180 - 222	220-230	180-220	220-270	220-230

The data in this specification sheet was determined based on our standard testing conditions. Operating performance may vary depending on the actual specification and condition of the truck as well as the condition of the operating area. Availability and specifications are determined regionally and are subject to change without notice. Please consult your authorised CESAB dealership for further details. SPEC_P200_EN_2019 / P&B P200 V13 – Copyright CESAB Material Handling Europe.

MATERIAL HANDLING SOLUTIONS

MATERIAL HANDLING SOLUTIONS

Via Buffalora, 3 – 25135 Brescia
info@mhs.srl · www.mhs.srl

CESAB