CESAB

spec sheet

CESAB S010i

1.0t capacity

Li-ion powered stacker

Li-ION



S010i

Truck Specifications

CHARACTERISTICS					
1.1	Manufacturer			CESAB	CESAB
1.2	Model designation			S010i - 290	S010i - 360
1.3	Drive			Battery (Li-ion)	Battery (Li-ion)
1.4	Operation			Pedestrian	Pedestrian
1.5	Load capacity	Q	[t]	1,0	1,0
1.6	Load centre distance	c	[mm]	600	600
1.8	Load distance, centre of support arm wheels to fork face	x	[mm]	760	760
1.9	Wheelbase	y	[mm]	1147	1147
WEIGHT					
2.1	Service weight (battery included)		[kg]	565	594
2.2	Axle load, with load, front/rear		[kg]	565/1000	575/1019
2.3	Axle load, without load, front/rear		[kg]	435/130	455/139
WHEELS AND TYRES					
3.1	Wheels			Polyurethane	Polyurethane
3.2	Wheel size drive wheel		Ø x width	210 x 70	210 x 70
3.3	Wheel size load wheels		Ø x width	84 x 93	84 x 93
3.4	Wheel size castor wheel		Ø x width	100 x 50	100 x 50
3.5	Wheels, number front/rear (x = driven)			1x + 1/2	1x + 1/2
3.6	Track width, front	b_{10}	[mm]	550	550
3.7	Track width, rear	b_{11}	[mm]	400/515	400/515
DIMENSIONS					
4.2	Height, mast lowered	h_1	[mm]	1930	2280
4.3	Free lift	h_2	[mm]	-	-
4.4	Lift	h_3	[mm]	2814	3514
	Lift height	h_{23}	[mm]	2900	3600
4.5	Height, mast extended	h_4	[mm]	3337	4037
4.9	Height of tiller arm in drive position, min. / max.	h_{14}	[mm]	710/1150	710/1150
4.15	Height, forks lowered	h_{13}	[mm]	86	86
4.19	Overall length	l_1	[mm]	1710	1710
4.20	Length to face of forks	l_2	[mm]	560	560
4.21	Overall width	b_1	[mm]	800	800
4.22	Fork dimensions	s/e/l	[mm]	60x180x1150	60x180x1150
4.25	Width over forks	b_5	[mm]	570	570
4.32	Ground clearance, centre of wheelbase	m_2	[mm]	30	30
4.34.1	Aisle width, pallets 1000x1200 crossways	A_{st}	[mm]	2197	2197
4.34.2	Aisle width, pallets 800x1200 lengthways	A_{st}	[mm]	2145	2145
4.35	Turning radius	W_a	[mm]	1350	1350
PERFORMANCES					
5.1	Travel speed, with/without load		[km/h]	4,2/4,5	4,2/4,5
5.2	Lift speed, with/without load		[m/s]	0,11/016	0,11/016
5.3	Lowering speed, with/without load		[m/s]	0,13/0,11	0,13/0,11
5.8	Max. gradeability, with/without load		[%]	5/10	5/10
5.10	Service brake			Electromagnetic	Electromagnetic
ELECTRIC MOTORS					
6.1	Drive motor, rating S2 60 min.		[kW]	0,65	0,65
6.2	Lift motor, rating S3 7,5%		[kW]	2,2	2,2
6.4	Battery voltage, nominal capacity K_5		[V/Ah]	24/60	24/60
6.5	Battery weight +/- 5%		[kg]	19	19
6.6	Energy consumption according to EN16796:2016		[kWh/h]	0,47	0,47
OTHERS					
8.1	Type of drive control			DC speed control	DC speed control
8.4	Sound level at driver's ear according to EN 12 053		[dB(A)]	< 70	< 70

Truck performance and dimensions are nominal and subject to tolerances.
Cesab Material Handling Europe products and specifications are subject to change without notice.

S010i

Dimensional Drawings

CESAB S010i			Duplex Tele	
h_{23}	Lift height (h_{13} + h_3)	mm	2900	3600
h_3	Lift	mm	2814	3514
h_1	Height, mast lowered	mm	1930	2280
h_{23}	Free lift, ground to top of forks	mm	-	-
h_4	Height, mast extended	mm	3337	4037

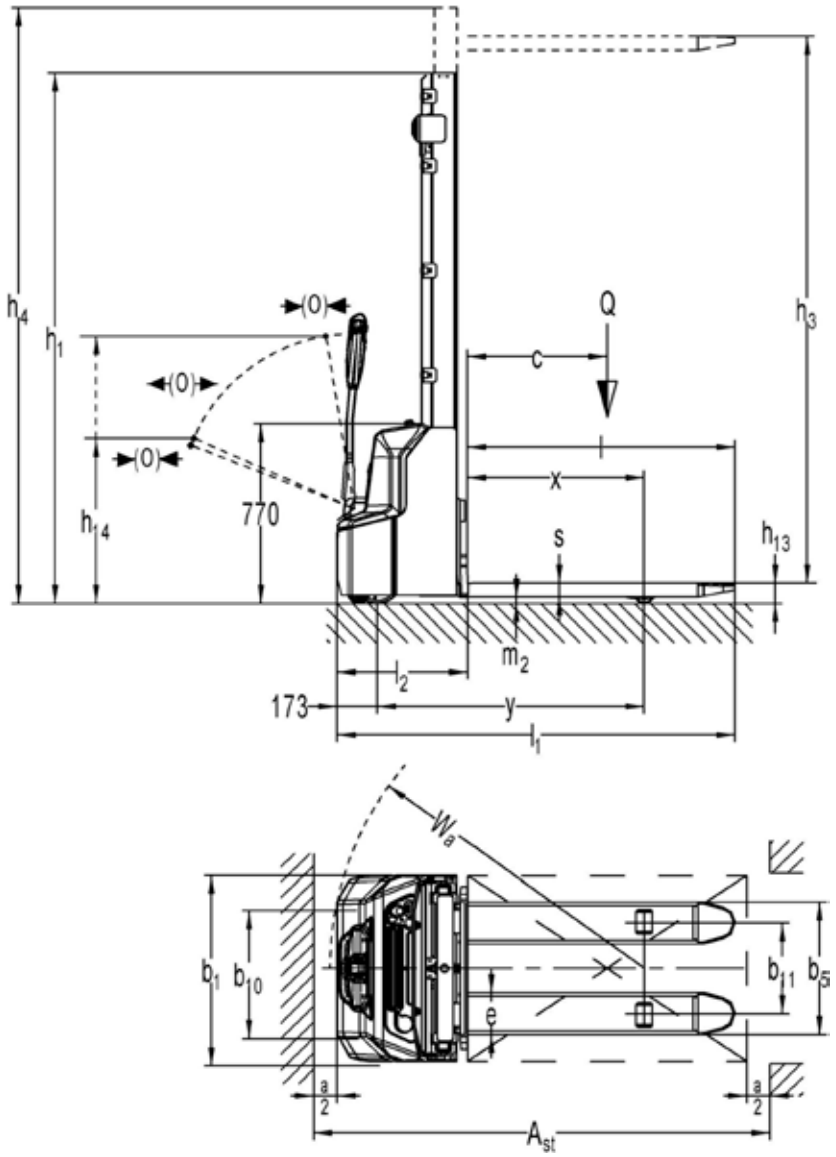

CESAB



Contact your local CESAB dealer to get professional advice and personalised, local service tailored to your business

The data in this specification sheet was determined based on our standard testing conditions. Operating performance may vary depending on the actual specification and condition of the truck as well as the condition of the operating area.

Availability and specifications are determined regionally and are subject to change without notice. Please consult your authorised CESAB dealership for further details.
SPEC_S010i_EN_2021 / Ucan V03 – Copyright CESAB Material Handling Europe.

Your authorised CESAB dealer

MATERIAL HANDLING SOLUTIONS

MATERIAL HANDLING SOLUTIONS

Via Buffalora, 3 – 25135 Brescia
info@mhs.srl · www.mhs.srl