Towing tractor 1.2 ton



TRACTO

W-series

TWE120











TOYOTA

MATERIAL HANDLING

Towing truck

Truck specifications					TWE120
Identification	1.2	Model			TWE120
	1.3	Drive			Electric
	1.4	Operator type			Hand
	1.5	Load capacity/rated load	Q	kg	1200
Weight	2.1	Service weight with battery		kg	90 [1]
Wheels	3.1	Drive wheel			Rubber, foam filled
	3.2	Wheel size, front		mm	Ø 260x85
	3.3	Wheel size, rear		mm	Ø 75x20
	3.5	Wheels, number front/rear (x = driven wheels)			2x/2
Dimensions	4.2	Height	h_1	mm	800
	4.9	Height of tiller in drive position, min./max	h_{14}	mm	1015/1060
	4.19	Overall length	l_1	mm	665
	4.21	Overall width	b_1	mm	493
Perf. data	5.1	Travel speed, with/without load		km/h	5/5
	5.7	Gradeability, with/without load [2]		%	
Motor	6.1	Drive motor rating		kW	0,4
	6.4	Battery voltage, nominal capacity K_5		V/Ah	24/22 [3]
Other	8.1	Type of drive control			Curtis
	8.4	Sound level at the driver's ear according to EN 12 053		dB(A)	70

[1] Service weight incl. battery same for all type of battery options.
[2] See diagram for values.
[3] Different battery options available.

All data are based on table configuration. Other configurations may give other values.
Truck performance and dimensions are nominal and subject to tolerances.
Products and specifications are subject to change without notice.

Dimensional drawings

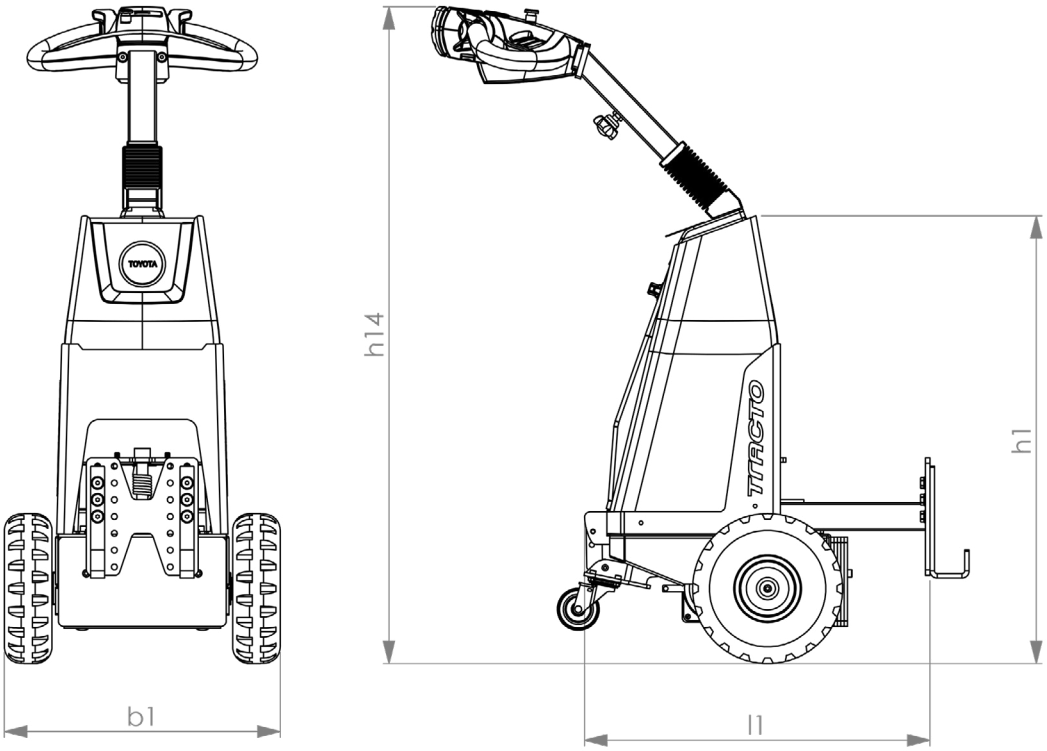

Gradeability

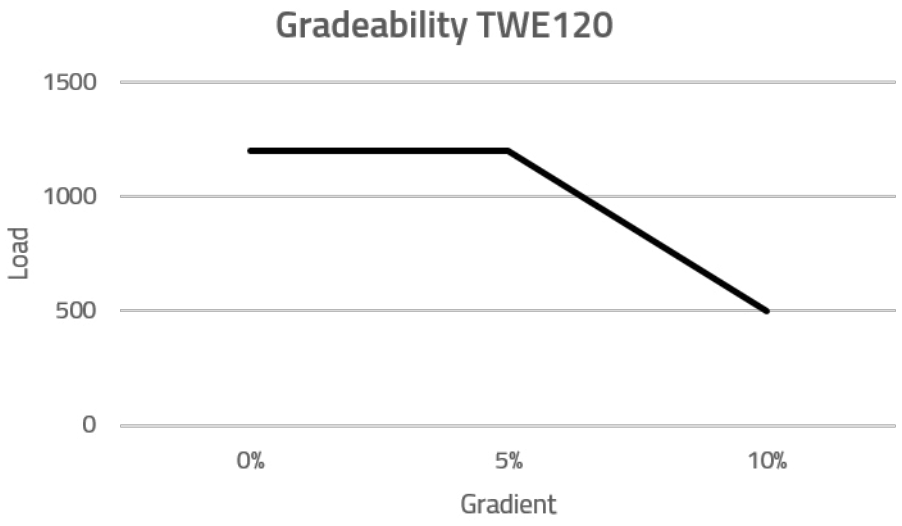

Truck features:

- Compact and easy to manoeuvre
- Ergonomic handle
- Rubber, foam filled wheels
- Adjustable steering arm
- Electrical locking hook (option)
- Adjustable mechanical locking hook (option)
- Pincode keypad (option)
- Li-ion batteries availibility (option)
- Battery change

MATERIAL HANDLING SOLUTIONS

MATERIAL HANDLING SOLUTIONS

Via Buffalora, 3 – 25135 Brescia
info@mhs.srl · www.mhs.srl

TOYOTA

MATERIAL HANDLING